HB41 Series of Half-Brick

Up to 150 Watts DC-DC Converter

PRODUCT OVERVIEW

This HB41series offers 150 watts of output power in standard half brick package. This series features high efficiency up to 90%, high power density and 1500 Volts of DC isolation. These converters are reliable and compact, with a single output voltage. This HB41series can deliver up to 12.5A of output current and provide precise regulated output voltage over a wide input range of 9 to 75 volts. These modules operate over a wide case temperature range of –40°C to +100°C. These converters offer Input Under-Voltage Lockout Protection (UVLO). The main features of these converters include remote On/Off, remote sense, output voltage adjustment, over voltage, over current and over temperature protection.

APPLICATIONS:

- Distributed Power Architectures
- Telecommunication and Servers
- Mobile Equipment
- Military and industrial applications

AVAILABLE OPTIONS

- Customizable Input/ Output voltages
- Heatsink, customizable packaging

Contact DATEL for other series of Half-Brick footprint, Cost Saving, Lower Power, different input or output voltage, etc.

FEATURES

- Industry standard Half Brick Package
- 150 Watts of output power
- Regulated Outputs, Fixed Switching Frequency
- Up to 90 % Efficiency
- Fully Isolated to 1500 Volts
- Over Current, Voltage and Temperature Protection
- 8:1 Wide Input range (9 - 75 Volts)
- Input Under Voltage Lockout Protection (UVLO)
- Extended temperature range of -40°C to +100°C
- Remote On/Off logic control
- Continuous Short Circuit Protection
- Safety designed to meet UL60950-1

MODEL NUMBER	INPUT VOLTAGE	OUTPUT VOLTAGE	OUTPUT CURRENT MAX	EFFICIENCY %	LOAD REGULATION	OPTIONS
HB41S12-12.5	9-75 VDC	12 VDC	12.5 A	89.5	± 0.2 %	N, H
HB41S15-10	9-75 VDC	15 VDC	10 A	90	± 0.2 %	N, H
HB41S24-6.25	9-75 VDC	24 VDC	6.25 A	89.5	± 0.2 %	N, H
HB41S28-5.35	9-75 VDC	28 VDC	5.35 A	90	± 0.2 %	N, H
HB41S48-3.13	9-75 VDC	48 VDC	3.13 A	90	± 0.2 %	N, H

BLOCK DIAGRAM

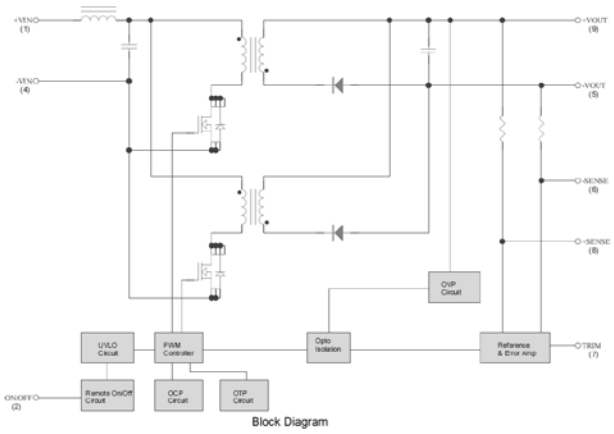

Block Diagram

ABSOLUTE MAXIMUM RATINGS

PARAMETER	CONDITIONS	Model	Min.	Typical	Max.	Units
Input Voltage						
Continuous	DC	All	-0.3		75	Volts
Transient	100ms, DC	All			100	Volts
Operating Case Temperature		All	-40		+100	°C
Storage Temperature		All	-55		+105	°C
Isolation Voltage	1 minute; input/output,	All	1500			VDC

Note: Stresses above the absolute maximum ratings can cause permanent damage to the device.

FUNCTIONAL SPECIFICATIONS

The following specifications apply over the operating temperature range, under the following conditions TA = +25°C unless otherwise specified

INPUT CHARACTERISTICS

PARAMETER	CONDITIONS	Model	Min.	Typical	Max.	Units
Operating Input Voltage	DC	All	9	36	75	Volts
Input Under-voltage Lockout						
Turn-On Voltage Threshold	DC	All	8.5	9	9.5	Volts
Turn-Off Voltage Threshold	DC	All	7.5	8	8.5	Volts
Lockout Hysteresis Voltage	DC	All		1		Volts
Maximum Input Current	100% Load, V_{in}= 9V	All		2000		mA
No-Load Input Current	V_{in}=Nominal	Vo = 12 V Vo = 15 V Vo = 24 V Vo = 28 V Vo = 48V		60 60 60 60 60		mA
Input Fuse	Fast Acting Type	All		30		A
Input Capacitance (External)	ESR < 0.7 Ohms			330		µF
Inrush Current (I^2t)		All			1	A^2s
Input Reflected Ripple Current	P-P thru 10µH inductor, 5Hz to 20MHz	All			50	mA

OUTPUT CHARACTERISTICS

PARAMETER	CONDITIONS	Device	Min.	Typical	Max.	Units
Output Voltage Set Point	Tc=25°C Vin=Nominal, I_o=I_{o_min}	Vo=12V Vo=15V Vo=24V Vo=28V Vo=48V	11.82 14.775 23.64 27.58 47.28	12 15 24 28 48	12.18 15.225 24.36 28.42 48.72	Volts
Output Voltage Regulation						
Load Regulation	I_o=I_{o_min} to I_{o_max}	All			±0.2	%
Line Regulation	V_{in}=low line to high line	All			±0.2	%
Temperature Coefficient	TC=-40°C to 100°C	All			±0.03	%/°C

OUTPUT CHARACTERISTICS

PARAMETER	CONDITIONS	Model	Min.	Typical	Max.	Units
Output Voltage Ripple and Noise (5Hz to 20MHz bandwidth)						
Peak-to-Peak	Full load, 10µF tantalum and 1.0uF ceramic capacitors.	Vo=12V Vo=15V Vo=24V Vo=28V Vo=48V			120 120 280 280 480	mV

RMS	Full load, 10µF solid tantalum and 1.0µF ceramic capacitors.	Vo=12V Vo=15V Vo=24V Vo=28V Vo=48V			60 60 100 100 200	mV
Operating Output Current Range		Vo=12V Vo=15V Vo=24V Vo=28V Vo=48V	0 0 0 0 0		12.5 10 6.25 5.35 3.13	A
Output DC Current Limit Inception	Vo = 90% Nominal Output Voltage	All	105	160	200	%
Maximum Output Capacitance	Full load (resistive)	Vo=12V Vo=15V Vo=24V Vo=28V Vo=48V	0 0 0 0 0		5000 5000 2000 1500 1000	µF

DYNAMIC CHARACTERISTICS

PARAMETER	CONDITIONS	Model	Min.	Typical	Max.	Units
Output Voltage Current Transient Response						
Step Change in Output Current	75% to 100% of I_{o_max}, output Capacitance 100uF, 10uF solid tantalum and 1.0uF ceramic capacitors	All			±5	%
Setting Time (within 1% Vout nominal)	d_i/d_t=0.1A/us	All			500	µs
Turn-On Delay and Rise Time						
Turn-On Delay Time, From On/Off control	$V_{on/off}$ to 90%V_{o_set}	All		80	100	ms
Turn-On Delay Time, From Input	$V_{in\ min}$ to 90%V_{o_set}	All		100	150	ms
Output Voltage Rise Time	10%V_{o_set} to 90%V_{o_set}	All		30	50	ms

EFFICIENCY

PARAMETER	CONDITIONS	Device	Min.	Typical	Max.	Units
Full Load	Vin=24V	Vo=12V Vo=15V Vo=24V Vo=28V Vo=48V		89.5 90 89.5 90 90.5		%
	Vin=36V	Vo=12V Vo=15V Vo=24V Vo=28V Vo=48V		89.5 90 89.5 90 90		
	Vin=48V	Vo=12V Vo=15V Vo=24V Vo=28V Vo=48V		89.5 90 89 89.5 89.5		

ISOLATION CHARACTERISTICS

PARAMETER	CONDITIONS	Model	Min.	Typical	Max.	Units
Isolation Voltage	1minute; input/output,	All			1500	Volts
Isolation Resistance		All	10			MΩ
Isolation Capacitance		Vo=12V Vo=15V Vo=24V Vo=28V Vo=48V		3500 3500 2500 2500 2500		pF

FEATURE CHARACTERISTICS

PARAMETER	CONDITIONS	Model	Min.	Typical	Max.	Units
Switching Frequency		All		200		KHz
On/Off Control, Positive Remote On/Off logic						
Logic Low (Module Off)	$V_{on/off}$ at $I_{on/off}$=1.0mA	All			1.2	V
Logic High (Module On)	$V_{on/off}$ at $I_{on/off}$=0.0uA	All	3.5 or Open Circuit		75	V
On/Off Control, Negative Remote On/Off logic						
Logic Low (Module On)	Von/off at Ion/off=1.0mA	All			1.2	V
Logic High (Module Off)	Von/off at Ion/off=0.0uA	All	3.5 or Open Circuit		75	V
On/Off Current for both remote on/off logic	$I_{on/off}$ at $V_{on/off}$=0.0V	All			1	mA
Leakage Current for both remote on/off logic	Logic High, $V_{on/off}$=15V	All			1	mA
Off Converter Input Current	Shutdown input idle current	All		12	18	mA
Output Voltage Trim Range	P_{out}=max rated power	All	-10		+10	%
Output Voltage Trim Range	P_{out}= max rated power (Vo=28V and Input = 9 to 13V only) HB41S28-5.35	Vo=28V	-10		+0	%
Output Over Voltage Protection		All	115	125	140	%
Over-Temperature Shutdown		All		110		°C

GENERAL SPECIFICATIONS

PARAMETER	CONDITIONS	Model	Min.	Typical	Max.	Units
MTBF	I_o=100% of $I_{o\ max}$; T_a=25°C per MIL-HDBK-217F	All		800		K hours
Weight		All		109		grams

Operating Temperature Range

This HB series of converters is rated to operate over a wide case temperature range of -40°C to +100°C. Consideration must be given to the de-rating curves when ascertaining maximum power that can be drawn from the converter. The maximum power drawn from half brick models is influenced by usual factors, such as:

- Input voltage range
- Output load current
- Forced air or natural convection

Output Voltage Adjustment

The output voltage for this HB series of 12, 15, 24, 28 and 48 Volts models is adjustable within the range of +10% to –10%. For the 28 Volts output, it is only adjustable for -10% to 0 for inputs of 9 to 13 volts

Over Current Protection

The converter is protected against over current or short circuit conditions. At the instance of current-limit inception, the module enters a hiccup mode of operation, whereby it shuts down and automatically attempts to restart. While the fault condition exists, the module will remain in this hiccup mode, and can remain in this mode until the fault is cleared. The unit operates normally once the output current is reduced back into its specified range.

Output over Voltage Protection

The output overvoltage protection consists of an internal circuit that limits the output voltage. The converter is protected against output over voltage conditions. When the output voltage is higher than the specified range, the module enters a hiccup mode of operation. The operation is identical with over current protection

Remote On/Off

The On/Off input pin permits the user to turn the power module on or off via a system signal. Two remote on/off options are available. Positive logic turns the module on during a logic high voltage on the on/off pin, and off during a logic low. Negative logic remote on/off turns the module off during a logic high and on during a logic low. The on/off pin is internally pulled up through a resistor. A properly de-bounced mechanical switch, open collector transistor, or FET can be used to drive the input of the On/Off pin. If not using the remote on/off feature: For positive logic, leave the On/Off pin open. For negative logic, short the on/off pin to Vin(-).

UVLO (Under Voltage Lock Out)

Input under voltage lockout is standard with this converter. At input voltages below the input under voltage lockout limit, the module operation is disabled.

Over Temperature Protection

These modules have an over temperature protection circuit to safeguard against thermal damage. When the case temperature rises above over temperature shutdown threshold, the converter will shut down to protect it from overheating. The module will automatically restart after it cools down.

Recommended Layout, PCB Footprint and Soldering Information

The user must ensure that other components and metal in the vicinity of the converter meet the spacing requirements to which the system is approved. Low resistance and low inductance PCB layout should be used where possible. Proper attention must also be given to low impedance tracks between power module, input and output grounds. The recommended footprints and soldering profiles are shown in the next two figures.

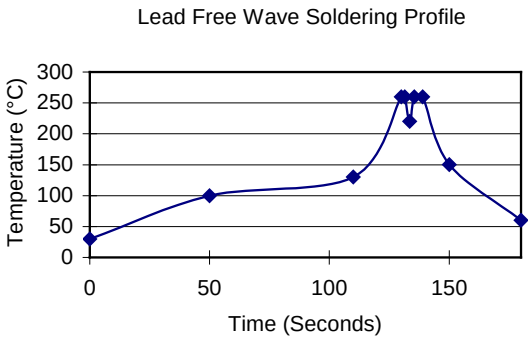

Note：

1. Soldering Materials: Sn/Cu/Ni
2. Preheat ramp up rate: 1.4 °C/Sec (From 50°C to 100°C)
3. Soaking temperature: 0.5 °C/Sec (From 100°C to 130°C), 60±20 seconds
4. Peak temperature: 260°C, above 250°C 3~6 Seconds
5. Cooling Ramp rate: -10.0 °C/Sec (From 260°C to 150°C)

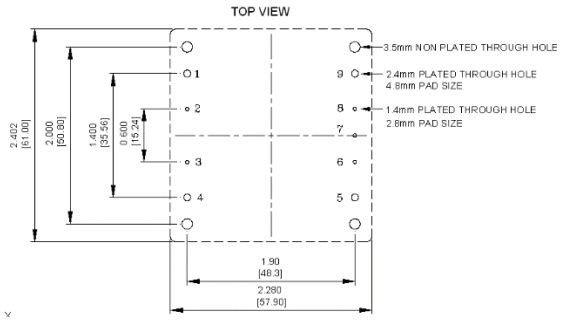

Convection Requirements for Cooling

To predict the approximate cooling needed for the half brick module, refer to the power de-rating curves in the next section These de-rating curves are approximations of the ambient temperatures and airflows required to keep the power module temperature below its maximum rating. Once the module is assembled in the actual system, the module's temperature should be monitored to ensure it does not exceed 100°C as being measured at the center of the top of the case (thus verifying proper cooling).

Thermal Considerations

The power module operates in a variety of thermal environments; however, sufficient cooling should be provided to help ensure reliable operation of the unit. Heat is removed by conduction, convection, and radiation to the surrounding environment. The test data is presented in the next section. The power output of the module should not be allowed to exceed rated power (V_{o_set} x I_{o_max}).

Power De-rating

The operating case temperature range of this HB series is -40°C to +100°C. When operating the HB series, proper de-rating or cooling is needed. The maximum case temperature under any operating condition should not exceed + 100°C.

The following curve is the de-rating curve of HB series without heat sink.

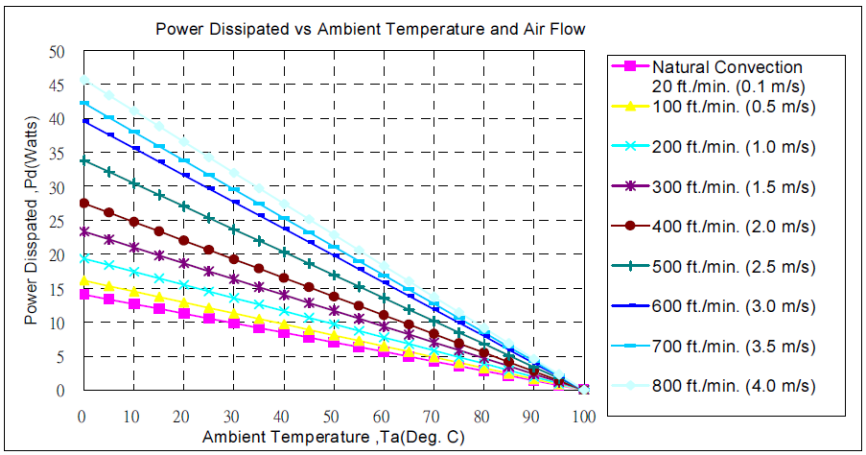

AIR FLOW RATE	TYPICAL Rca
Natural Convection 20ft./min. (0.1m/s)	7.12 °C/W
100 ft./min. (0.5m/s)	6.21 °C/W
200 ft./min. (1.0m/s)	5.17 °C/W
300 ft./min. (1.5m/s)	4.29 °C/W
400 ft./min. (2.0m/s)	3.64 °C/W
500 ft./min. (2.5m/s)	2.96 °C/W
600 ft./min. (2.5m/s)	2.53 °C/W
700 ft./min. (2.5m/s)	2.37 °C/W
800 ft./min. (2.5m/s)	2.19 °C/W

Example (without heat sink):

What is the minimum airflow necessary for a HB41S12-12.5 operating at nominal line voltage, an output current of 12.5A, and a maximum ambient temperature of 40°C?

Solution:

Given: Vin=36Vdc, Vo=12Vdc, Io=12.5A

Determine Power dissipation (Pd):
Pd =Pi-Po=Po(1- η)/ η
Pd =12V×12.5A×(1-0.895)/0.895 = 17.60 Watts

Determine airflow:
Given: Pd = 17.60 W and Ta=40°C

Check Power Derating curve:
Minimum airflow= 500 ft./min.
Verify:

Maximum temperature rise is
$\triangle$T = Pd × Rca=17.60W×2.96 =52.17°C.

Maximum case temperature is
Tc=Ta+$\triangle$T=92.17°C <100°C.

Where:
The Rca is thermal resistance from case to ambient environment.
Ta is ambient temperature and Tc is case temperature.

The following curve is the de-rating curve of HB series with heat sink

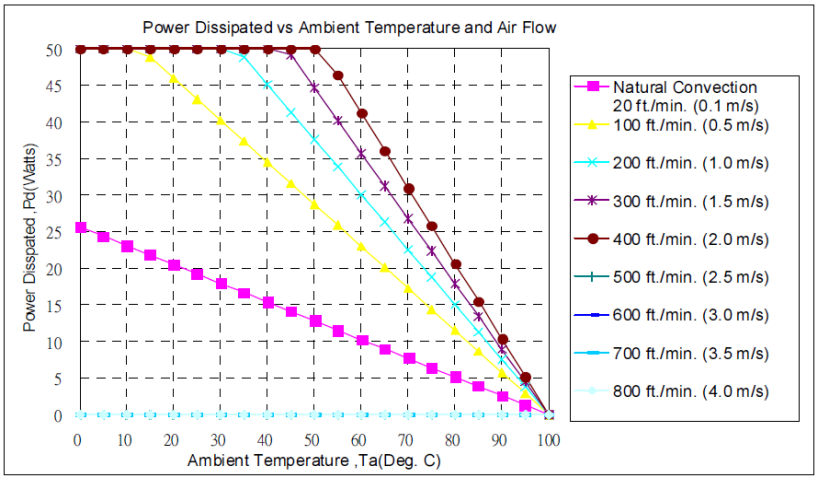

AIR FLOW RATE	TYPICAL R_{ca}
Natural Convection 20ft./min. (0.1m/s)	3 ℃/W
100 ft./min. (0.5m/s)	1.44 ℃/W
200 ft./min. (1.0m/s)	1.17 ℃/W
300 ft./min. (1.5m/s)	1.04 ℃/W
400 ft./min. (2.0m/s)	0.95 ℃/W

Example (with heat sink M-C308):

What is the minimum airflow necessary for a HB41S12-12.5 operating at nominal line voltage, an output current of 12.5A, and a maximum ambient temperature of 40℃?

Solution:

Given:
Vin = 36Vdc, Vo=12Vdc, Io=12.5A

Determine Power dissipation (Pd):
Pd=Pi-Po=Po(1- η)/ η
Pd=12×12.5×(1-0.895)/0.895=17.60Watts

Determine airflow:
Given: Pd=17.60W and Ta=40℃

Check above Power de-rating curve:
Minimum Airflow is 100 ft/min

Verify:
Maximum temperature rise is
△T = Pd × Rca = 17.60×1.74 = 30.6℃
Maximum case temperature is
Tc=Ta+△T = 70.6℃ <100℃

Where:
The Rca is thermal resistance from case to ambient environment.
Ta is ambient temperature and Tc is case temperature.

Half Brick Heat Sinks:

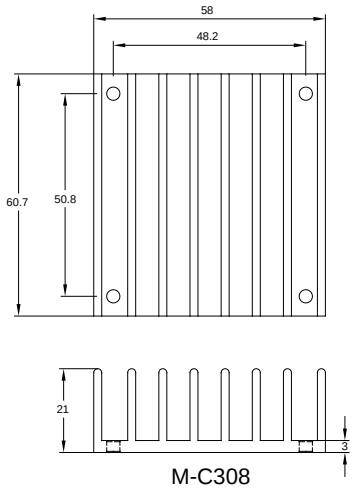

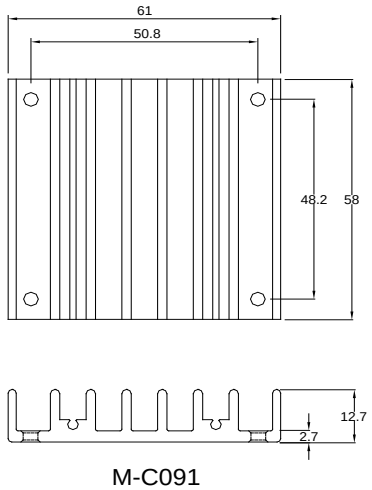

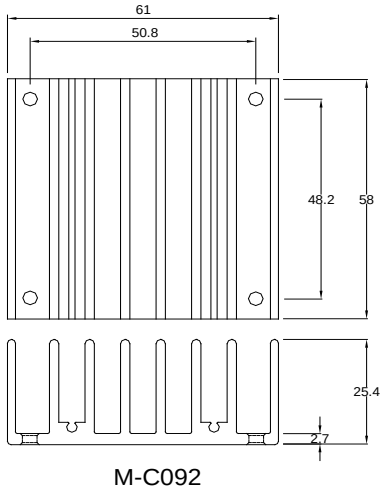

M-C308 (G6620400201)
Longitudinal Heat Sink

Rca:
3.90°C/W (typ.), natural convection
1.74°C/W (typ.), at 100LFM
1.33°C/W (typ.), at 200LFM
1.12°C/W (typ.), at 300LFM
0.97°C/W (typ.), at 400LFM

M-C091 (G6610120402)
Transverse Heat Sink

Rca:
4.70°C/W (typ.), natural convection
2.89°C/W (typ.), at 100LFM
2.30°C/W (typ.), at 200LFM
1.88°C/W (typ.), at 300LFM
1.59°C/W (typ.), at 400LFM

M-C092 (G6610130402)
Transverse Heat Sink

Rca:
3.00°C/W (typ.), natural convection
1.44°C/W (typ.), at 100LFM
1.17°C/W (typ.), at 200LFM
1.04°C/W (typ.), at 300LFM
0.95°C/W (typ.), at 400LFM

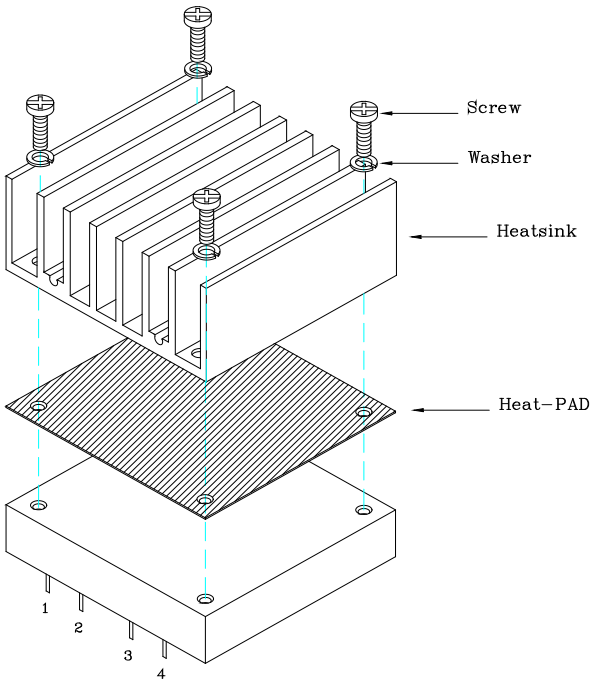

THERMAL PAD: SZ 56.9*60*0.25 mm (G6135041091)
SCREW: SMP+SW M3*8L
(G75A1300322)

EFFICIENCY vs. LOAD

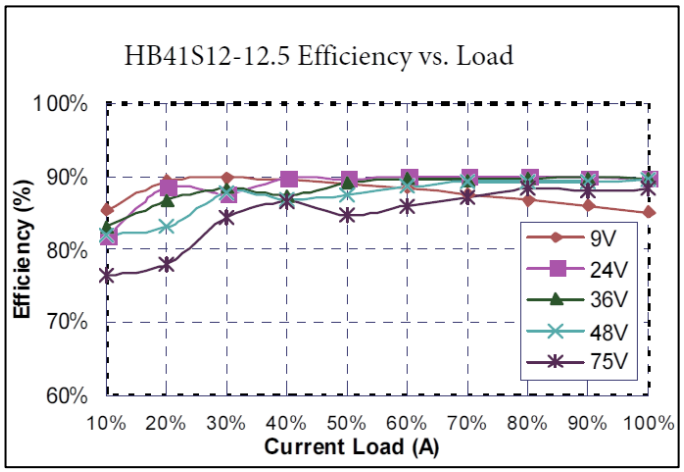

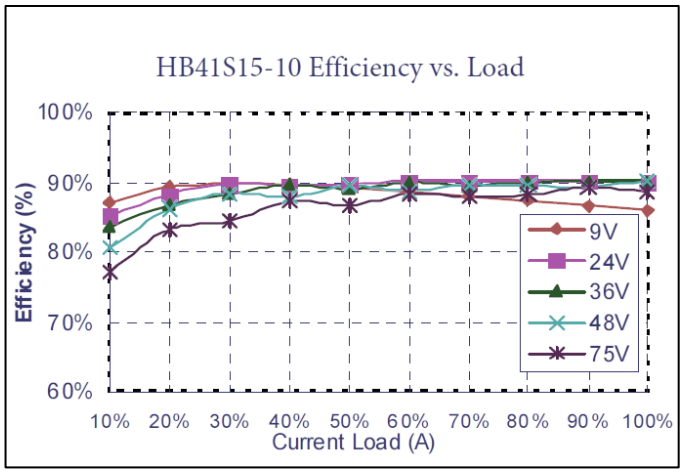

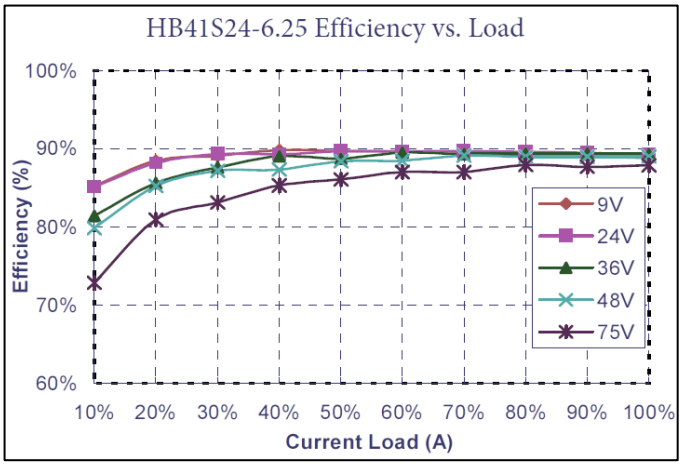

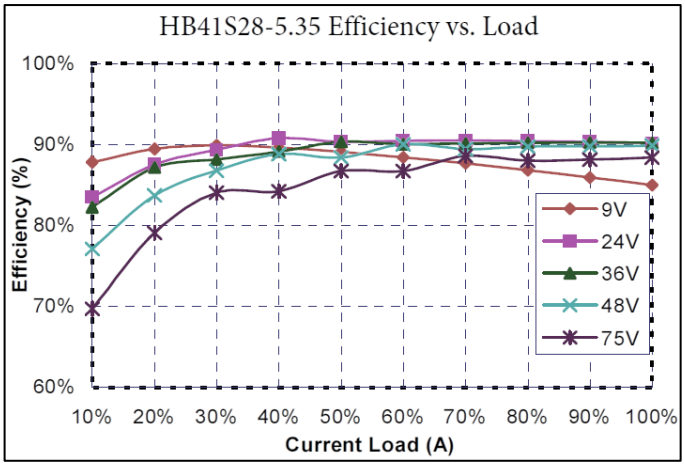
HB41S28-5.35 Efficiency vs. Load
100%
90%
80%
70%
60%
Efficiency (%)
10% 20% 30% 40% 50% 60% 70% 80% 90% 100%
Current Load (A)
9V
24V
36V
48V
75V

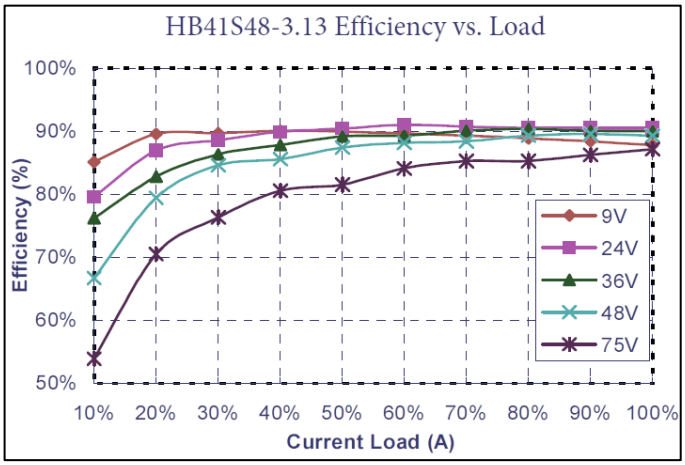
HB41S48-3.13 Efficiency vs. Load
100%
90%
80%
70%
60%
50%
Efficiency (%)
10% 20% 30% 40% 50% 60% 70% 80% 90% 100%
Current Load (A)
9V
24V
36V
48V
75V

Test Set-Up

The basic test set-up to measure efficiency, load regulation, line regulation and other parameters is shown in the next figure. When testing the converter under any transient conditions, the user should ensure that the transient response of the source is sufficient to power the equipment under test. Below is the calculation of:

1- Efficiency
2- Load regulation
3- Line regulation

The value of efficiency is defined as:

$$\eta = \frac{Vo \times Io}{Vin \times Iin} \times 100\%$$

Where:

V_o is output voltage,
I_o is output current,
V_{in} is input voltage,
I_{in} is input current.

The value of load regulation is defined as:

$$Load.reg = \frac{V_{FL} - V_{NL}}{V_{NL}} \times 100\%$$

Where:

V_{FL} is the output voltage at full load
V_{NL} is the output voltage at no load

The value of line regulation is defined as:

$$Line.reg = \frac{V_{HL} - V_{LL}}{V_{LL}} \times 100\%$$

Where: V_{HL} is the output voltage of maximum input voltage at full load. V_{LL} is the output voltage of minimum input voltage at full load.

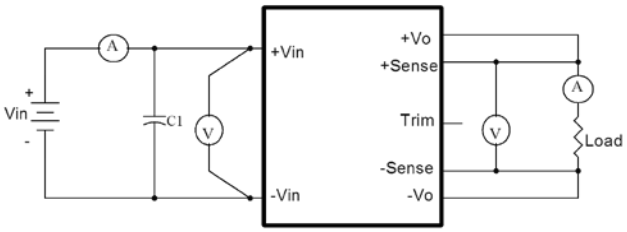

HB Series Test Setup

For typical electrical connection, please refer to the connection below,

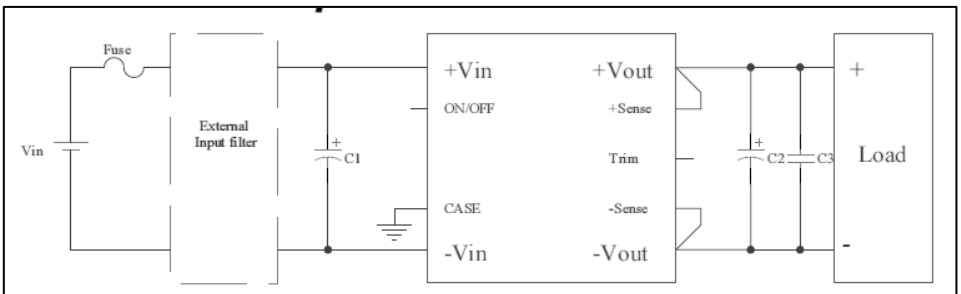

Typical electrical connection (Positive logic)

1. Use input capacitor, C1 more than 330uF for 36Vin models If the ambient temperature is less than -20 ℃, use twice of the recommended capacitor above. If the impedance of input line is high, input capacitor must be more than above.

2. Use output capacitor, C2 and C3, according to minimum and maximum capacitor recommendation. If the ambient temperature is less than -20 ℃, use at least 3 pieces of the recommended minimum capacitors.

3. Use external fuse for each unit.

Output Voltage Adjustment

In order to trim the voltage up or down, one needs to connect the trim resistor either between the trim pin and -Vo for trim-up or between trim pin and +Vo for trim-down. The output voltage trim range is ±10%. This is shown in the figure below

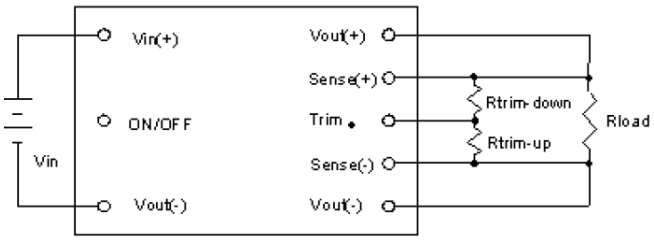

Output voltage trim circuit configuration

The Trim pin should be left open if trimming is not being used. Connecting an external resistor (Rtrim-down) between the Trim pin and the Vout(+) (or Sense(+)) pin decreases the output voltage. The following equation determines the required external resistor value to obtain a down percentage output voltage change of Δ%

Vout = 12V and 15V

$$Rtrim_down = 20 * \frac{(Vo,set - \Delta\% * Vo,set - 1.24)}{\Delta\% * Vo,set} - 100K\Omega$$

Vout = 24V

$$Rtrim_down = 20 * \frac{(Vo,set - \Delta\% * Vo,set - 2.5)}{\Delta\% * Vo,set} - 100K\Omega$$

Vout = 28V

$$Rtrim_down = 23.7 * \frac{(Vo,set - \Delta\% * Vo,set - 2.5)}{\Delta\% * Vo,set} - 150K\Omega$$

Vout = 48V

$$Rtrim_down = 36 * \frac{(Vo,set - \Delta\% * Vo,set - 2.5)}{\Delta\% * Vo,set} - 200K\Omega$$

Where:

$$V_{out} = V_{o,set},\ \Delta\% = \left(\frac{V_{o,set} - V_{desired}}{V_{o,set}}\right) \times 100$$

For example: to trim-down the output voltage of the HB41S12-12.5 module by 5% to 11.4V, R trim_down is calculated as follows

$$Rtrim_down = 20 * \frac{(12 - 5\% * 12 - 1.24)}{5\% * 12} - 100K\Omega$$

$$Rtrim_down = 238.7K\Omega$$

Connecting an external resistor (Rtrim-up) between the Trim pin and the Vout (-) (or Sense (-)) pin increases the output voltage. The following equations determine the required external resistor value to obtain a up percentage output voltage change of Δ%.

Vout = 12V and 15V

$$Rtrim_up = 20 * \frac{(1.24 - \frac{0.46 * 100}{100 + 4.3})}{\Delta\% * Vo,set} - \frac{4.3 * 100}{100 + 4.3} K\Omega$$

Vout= 24 V

$$Rtrim_up = 20 * \frac{(2.5 - \frac{0.46 * 100}{100 + 5.6})}{\Delta\% * Vo,set} - \frac{5.6 * 100}{100 + 5.6} K\Omega$$

Vout = 28 V

$$Rtrim_up = 23.7 * \frac{(2.5 - \frac{0.46 * 150}{150 + 5.6})}{\Delta\% * Vo,set} - \frac{5.6 * 150}{150 + 5.6} K\Omega$$

Vout = 48 V

$$Rtrim_up = 36 * \frac{(2.5 - \frac{0.46 * 200}{200 + 5.1})}{\Delta\% * Vo,set} - \frac{5.1 * 200}{200 + 5.1} K\Omega$$

Where:

$$V_{out} = V_{o,set}, \Delta\% = \left(\frac{V_{desired} - V_{o,set}}{V_{o,set}} \right) \times 100$$

For example: to trim-up the output voltage of the HB41S12-12.5 module by 5% to 12.6V, R trim_up is calculated as follows:

$$Rtrim_up = 20 * \frac{(1.24 - \frac{0.46*100}{100+4.3})}{5\%*12} - \frac{4.3*100}{100+4.3} K\Omega$$
$$Rtrim_up = 22.5K\Omega$$

Note: Although the output voltage can be increased by both the remote sense and by the trim, the maximum increase for the output voltage is not the sum of both. The maximum increase is the larger of either the remote sense or the trim. The amount of power delivered by the module is defined as the voltage at the output terminals multiplied by the output current. When using remote sense and trim, the output voltage of the module can be increased and consequently increase the power output of the module if output current remains unchanged. Care should be taken to ensure that the maximum output power of the module remains at or below the maximum rated power (Maximum rated power = Vo,set x Io,max) The output voltage on 12V&15V&24V&48V models is adjustable within the range of +10% to –10%.For 28V models, see input & output trim curves for trim up and trim down is -10%

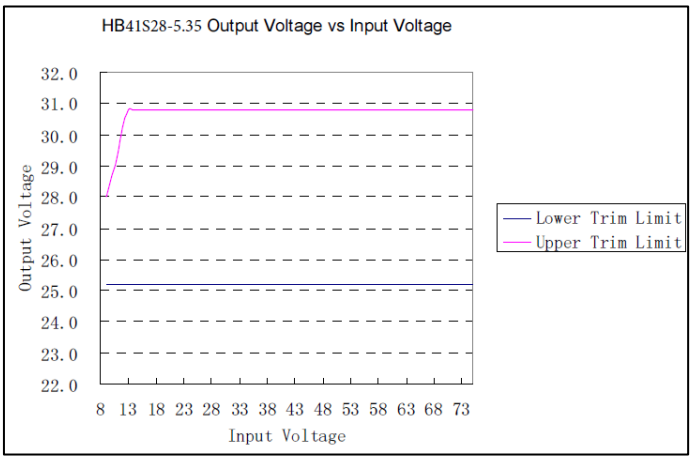

Output Remote Sensing

This HB SERIES converter has the capability to remotely sense both lines of its output. This feature moves the effective output voltage regulation point from the output of the unit to the point of connection of the remote sense pins. This feature automatically adjusts the real output voltage of the HB series in order to compensate for voltage drops in distribution and maintain a regulated voltage at the point of load. The remote-sense

voltage range is:
$[(+V_{out}) - (-V_{out})] - [(+Sense) - (-Sense)] \leqq 10\%$ of $V_{o_nominal}$
If the remote sense feature is not to be used, the sense pins should be connected locally. The +Sense pin should be connected to the +Vout pin at the module and the -Sense pin should be connected to
the -Vout pin at the module.
This is shown in the schematic below.

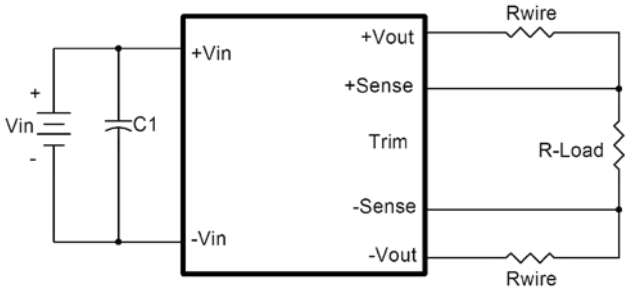

Note: Although the output voltage can be increased by both the remote sense and by the trim, the maximum increase for the output voltage is not the sum of both. The maximum increase is the larger of either the remote sense or the trim. The amount of power delivered by the module is defined as the voltage at the output terminals multiplied by the output current. When using remote sense and trim, the output voltage of the module can be increased and consequently increase the power output of the module if output current remains unchanged. Care should be taken to ensure that the maximum output power of the module remains at or below the maximum rated power (Maximum rated power = $V_{o,set}$ x $I_{o,max}$)

Output Ripple and Noise

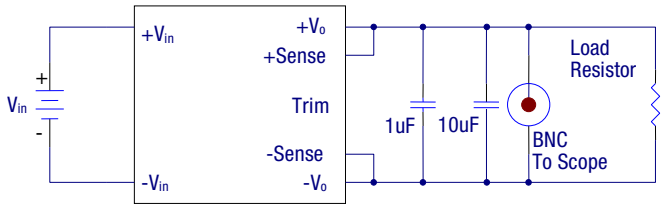

Output ripple and noise is measured with 10uF solid tantalum capacitors (for 48Vout with 10uF Aluminum) and 1.0uF ceramic across the output.

Output Capacitance

For good transient response, low ESR output capacitors should be located close to the point of load. PCB design emphasizes low resistance and inductance tracks in consideration of high current applications. Output capacitors with their associated ESR values have an impact on loop stability and bandwidth. The minimum output capacitance is 100uF which need three or four times capacitance when operating below -20℃ and the absolute maximum value of this HB series' output capacitance, please refer to Maximum Output Capacitance in the parameter table. For values larger than this, please contact your local DATEL contact.

SAFETY and EMC

Input Fusing and Safety Considerations

This HBR series converters have no internal fuse. In order to achieve maximum safety and system protection, always use an input line fuse. We recommend a 30A time delay fuse. It is recommended that the circuit have a transient voltage suppressor diode (TVS) across the input terminal to protect the unit against surge or spike voltage and input reverse voltage as shown below:

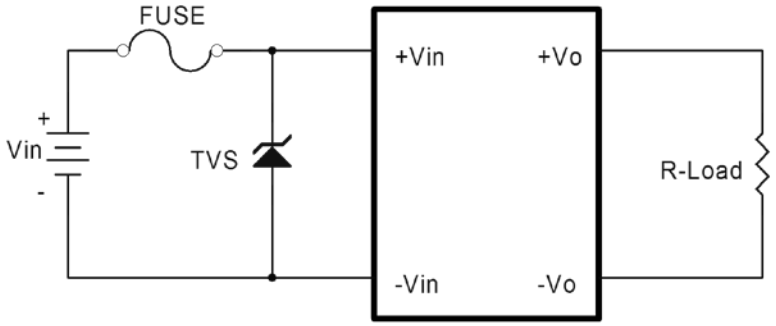

EMC Considerations

EMI Test standard: EN55022 Class A and Class B Conducted Emission

Test Condition: Input Voltage: Nominal, Output Load: Full Load

EMI and conducted noise meet EN55022 Class A:

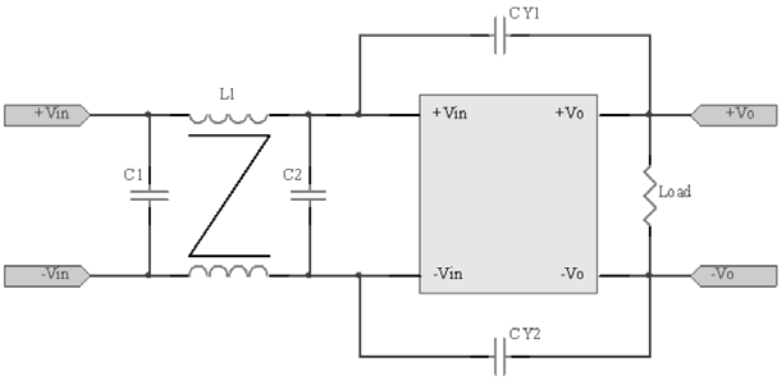

Connection circuit for conducted EMI Class A testing

Model Number	C1	C2	CY1	CY2	L1
HB41S12-12.5	220µF/100V	220µF/100V	1500 pF	1500 pF	0.2mH
HB41S15-10	220µF/100V	220µF/100V	1500 pF	1500 pF	0.2mH
HB41S24-6.25	220µF/100V	220µF/100V	1500 pF	1500 pF	0.2mH
HB41S28-5.35	220µF/100V	220µF/100V	1500 pF	1500 pF	0.2mH
HB41S48-3.13	220µF/100V	220µF/100V	1500 pF	1500 pF	0.2mH

Note: C1 and C2 are NICHICON PW series aluminum capacitors, CY1 and CY2 are ceramic capacitors, L1 Core use SM CM20*12*10 Winding 5turns (double wire). C1, C2 Aluminum Capacitors and C3, C4 Ceramic Capacitor.

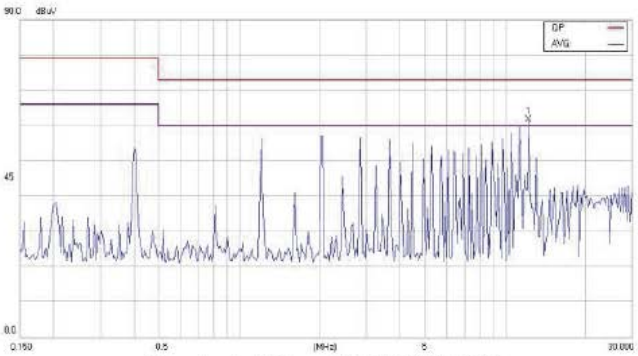

Conducted Class A HB41S12-12.5

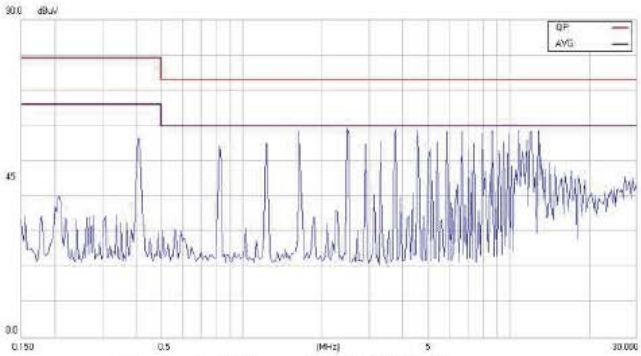

Conducted Class A HB41S15-10

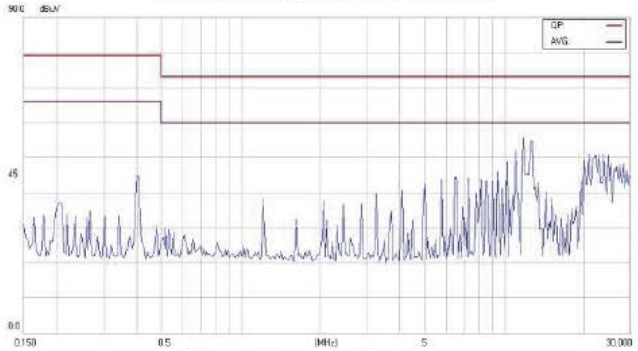

Conducted Class A HB41S24-6.25

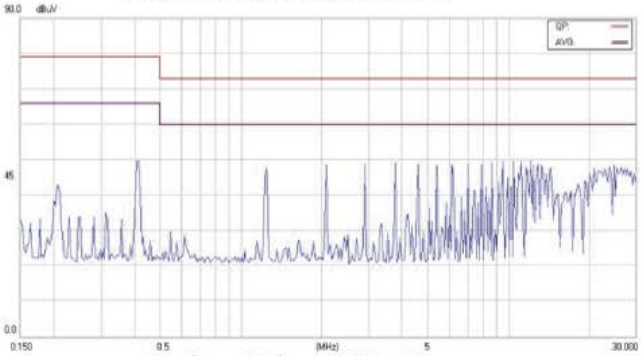

Conducted Class A HB41S28-5.35

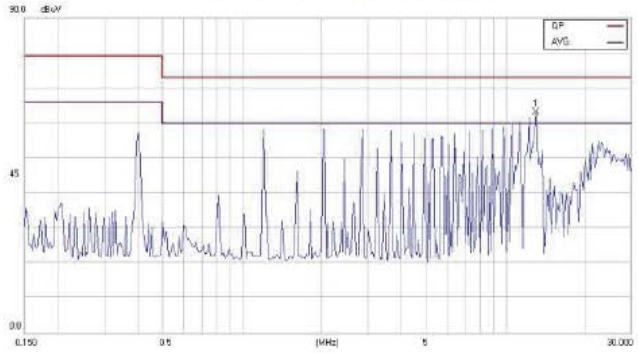

Conducted Class A HB41S48-3.13

MECHANICAL SPECIFICATIONS

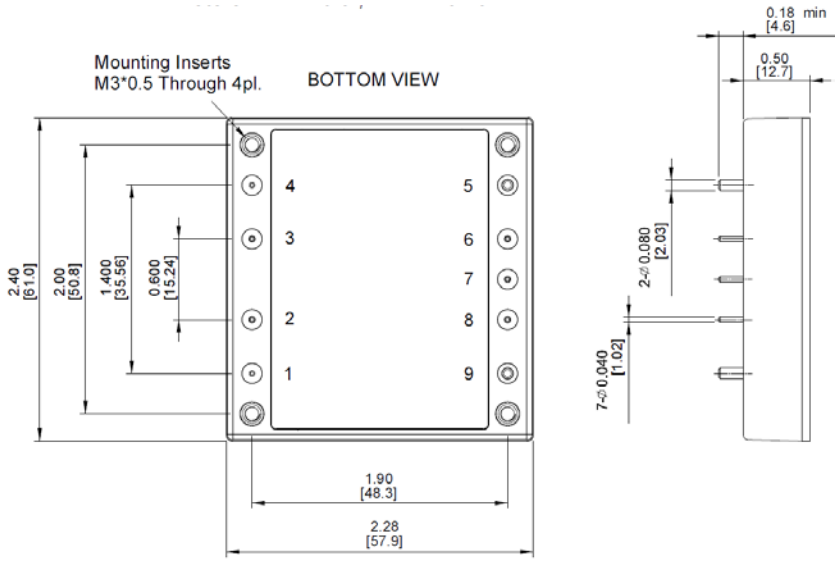

Note: All dimensions are in inches (millimeters). Tolerance: x.xx ±0.02 in. (0.5mm), x.xxx ±0.010 in. (0.25 mm) unless otherwise noted

PIN CONNECTIONS

PIN CONNECTION	
PIN	**SINGLE**
1	+ V Input
2	On/Off
3	Case
4	-V Input
5	- V Output
6	-Sense
7	Trim
8	+ Sense
9	+ V Output

PART NUMBER ORDERING INFORMATION

Family, Form Factor, Package	Nominal Input Voltage	Number of Outputs	Voltage Output		Output Current (A)	Options
HB	41	S	12	—	12.5	N, H
	(9 -75) - 36Volts		12 Volts 15 Volts 24 Volts 28 Volts 48 Volts		12 Volts – 12.5 15 Volts – 10 24 Volts – 6.25 28 Volts – 5.35 48 Volts – 3.13	None – Positive On/Off Remote H – Heatsink N- Negative On/Off Remote

Note: For proper part ordering, enter option suffixes in order listed in table above

DATEL is a registered Trademark of DATEL, Inc.
120 Forbes Boulevard, Suite 125, Mansfield, MA 02048 USA
ITAR and ISO 9001/2015 REGISTERED

DATEL, Inc. makes no representation that the use of its products in the circuits described herein, or the use of other technical information contained herein, will not infringe upon existing or future patent rights. The descriptions contained herein do not imply the granting of licenses to make, use, or sell equipment constructed in accordance therewith. Specifications are subject to change without notice.