QB Series Quarter-Brick

Up to 100 Watts DC-DC Converter

PRODUCT OVERVIEW

This QB series offers up to 100 watts of output power housed in an industry standard quarter-brick package with high power density. This QB series features wide input voltage ranges 9 to 36 or 18 to 75 VDC, high efficiency and isolation of 1500VDC and provide a precise regulated voltage output.

This QB models operate over the case temperature range of – 40°C to +100°C. The modules offer Input under voltage lock out (UVLO), and are fully protected against output overvoltage and over temperature conditions. All models have internal over current and continuous short circuit protection. The output voltage can be trimmed to the required voltage and the product includes remote on/off function.

This QB series provides efficiency up to 88%, meet industrial standard and is the best choice for military, industrial, distributed power architectures, telecommunications, and mobile applications.

Please contact DATEL if your application requires different output voltage or any other special feature.

FEATURES

- Isolated Output up to 100 Watts
- Wide input range (9 to 36 or 18 to 75 VDC)
- Regulated Outputs
- Efficiency up to 88%
- Remote On/Off
- Remote Sense
- Continuous Short Circuit Protection
- -40 ^{0}C to +100 ^{0}C
- Voltage/Current/Over-temperature Protection
- Quarter Brick Dimension
- Meet Industrial Standard
- Designed to meet UL60950-1 and EN50155

APPLICATIONS:

- Military Systems
- Distributed Power Systems
- mobile equipment
- Telecommunications

AVAILABLE OPTIONS

- Customizable Input/ Output voltages
- Heatsink, customizable packaging
- UL/CSA60950-1
- CE Mark 2004/108/EC
- 150 Watt family is available in (4:1) Vin
- Higher Power version in (2:1) Vin

MODEL NUMBER	INPUT VOLTAGE	OUTPUT VOLTAGE	OUTPUT CURRENT MAX	EFFICIENCY %	LOAD REGULATION	OPTIONS
QB22S3.3-30	9-36 VDC	3.3VDC	30 A	86	± 0.2 %	N, M, H1, H2
QB22S5-20	9-36 VDC	5.0 VDC	20 A	86	± 0.2 %	N, M, H1, H2
QB22S12-8.3	9-36 VDC	12 VDC	8.3 A	86	± 0.2 %	N, M, H1, H2
QB22S15-6.7	9-36 VDC	15 VDC	6.7 A	86	± 0.2 %	N, M, H1, H2
QB22S24-4.17	9-36 VDC	24 VDC	4.17 A	87	± 0.2 %	N, M, H1, H2
QB45S3.3-30	18-75 VDC	3.3VDC	30 A	88	± 0.2 %	N, M, H1, H2
QB45S5-20	18-75 VDC	5.0 VDC	20 A	88	± 0.2 %	N, M, H1, H2
QB45S12-8.3	18-75 VDC	12 VDC	8.3 A	88	± 0.2 %	N, M, H1, H2
QB45S15-6.7	18-75 VDC	15 VDC	6.7 A	88	± 0.2 %	N, M, H1, H2
QB45S24-4.17	18-75 VDC	24 VDC	4.17 A	88	± 0.2 %	N, M, H1, H2

BLOCK DIAGRAM

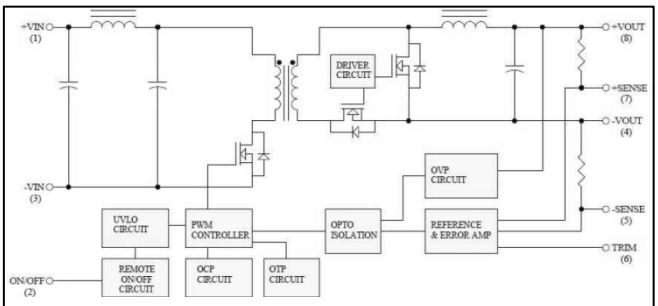

Electrical Block Diagram for 5Vout and 3.3Vout

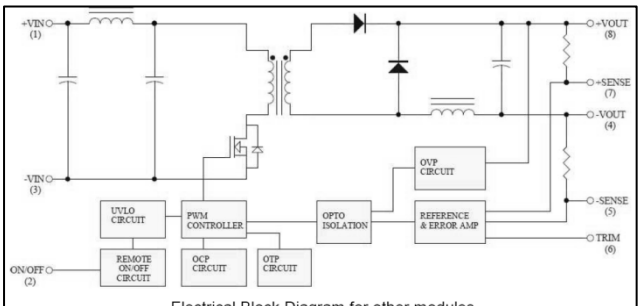

Electrical Block Diagram for other modules

ABSOLUTE MAXIMUM RATINGS

PARAMETER	CONDITIONS	Model	Min.	Typical	Max.	Units
Input Voltage						
Continuous	DC	24 Vin 48 Vin	-0.3 -0.3		36 75	Volts
Transient	100 ms, DC	24 Vin 48 Vin			50 100	Volts
Operating Case Temperature		All	-40		+100	°C
Storage Temperature		All	-55		+105	°C
Isolation Voltage	1 minute	All	1500			Volts

Stresses above the absolute maximum ratings can cause permanent damage to the device.

FUNCTIONAL SPECIFICATIONS

The following specifications apply over the operating temperature range, under the following conditions TA = +25°C unless otherwise specified

INPUT CHARACTERISTICS

PARAMETER	CONDITIONS	Model	Min.	Typical	Max.	Units
Operating Input Voltage	**DC**	24 Vin 48 Vin	9 18	24 48	36 75	Volts
Input Under-voltage Lockout						
Turn-On Voltage Threshold	DC Vin (on)	24 Vin 48 Vin	8.0 16.0	8.8 17.0	9.0 18.0	Volts
Turn-Off Voltage Threshold	DC Vin (off)	24 Vin 48 Vin	7.5 15.0	8.0 16.0	8.5 17.0	Volts
Maximum Input Current	100% Load, V_{in}= 9V 100% Load, V_{in}= 18V	24 Vin 48 Vin		14.2 10.8		A
No-Load Input Current	V_{in}=Nominal	QB22S3.3-30 QB22S5-20 QB22S12-8.3 QB22S15-6.7 QB22S24-4.17 QB45S3.3-30 QB45S5-20 QB45S12-8.3 QB45S15-6.7 QB45S24-4.17		120 120 80 80 80 60 60 30 30 30		mA
Input Capacitance	<0.7 Ohms ESR	24 Vin 48 Vin		100 47		µF
Input Fuse	Slow Blow/Antisurge HRC 200 V rating	24 Vin 48 Vin			20 15	A
Inrush Current (I^2t)		24 Vin 48 Vin			1.0 0.5	A^2s
Input Reflected Ripple Current	P-P thru 12µH inductor, 5Hz to 20MHz	24 Vin 48 Vin		30 50		mA

OUTPUT CHARACTERISTICS

PARAMETER	CONDITIONS	Device	Min.	Typical	Max.	Units
Output Voltage Set Point	V_{in}=Nominal V_{in}, I_o = I_{o_max}, Tc=25°C DC	Vo=3.3 V Vo=5.0 V Vo=12 V Vo=15V Vo=24 V	3.2505 4.925 11.82 14.77 23.64	3.3 5 12 15 24	3.3495 5.075 12.18 15.23 24.36	Volts
Output Voltage Regulation						
Load Regulation	I_o=I_{o_min} to I_{o_max}	All			±0.2	%
Line Regulation	V_{in}=low line to high line	All			±0.2	%
Temperature Coefficient	TC=-40°C to 100°C	All			±0.03	%/°C
Output Voltage Ripple and Noise (5Hz to 20MHz bandwidth)						
Peak-to-Peak	Full load, 10µF tantalum and 1.0uF ceramic capacitors	Vo=3.3V Vo=5V Vo=12V Vo=15V Vo=24V			100 100 150 150 240	mV
RMS	Full load, 10µF solid tantalum and 1.0µF ceramic capacitors	Vo=3.3V Vo=5V Vo=12V Vo=15V Vo=24V			40 40 60 60 100	mV
Operating Output Current Range		Vo=3.3V Vo=5.0V Vo=12V Vo=15V Vo=24V	0 0 0 0 0		30 20 8.3 6.70 4.17	A
Remote Sense Compensation		All			10	%
Output Voltage Trim Range		All	-10		10	%
Over Voltage Shutdown	Case	All		110		°C
Over Voltage restart Hysteresis		All		10		°C
Output Capacitance (External)		Vo=3.3V Vo=5.0V Vo=12V Vo=15V Vo=24V			10,000 10,000 2,200 2,200 2,200	µF
Output DC Current Limit inception	Vo = 90% Nominal Output Voltage Hiccup mode (110%-160%)	Vo=3.3V Vo=5.0V Vo=12V Vo=15V Vo=24V	33 22 9.13 7.37 4.59	42 28 11.5 9 5.75	48 32 13.28 10.72 6.67	A
Output Overvoltage	Hiccup mode (115-140%)	Vo=3.3V Vo=5.0V Vo=12V Vo=15V Vo=24V	3.79 5.75 13.8 17.2 27.6	4.0 6.0 14.5 18.0 29	4.6 7.0 16.8 21.0 33.6	V

DYNAMIC CHARACTERISTICS

PARAMETER	CONDITIONS	Model	Min.	Typical	Max.	Units
Output Voltage Current Transient						
Peak Deviation	Load change from 50% to 75% to 50% of Io,max; Io/_t=0.1A/µs; VIN=VIN,nom; TA=25°C ; 330µF Aluminum external capacitance and 1uF ceramic capacitor.	Vo=3.3V Vo=5.0V Vo=12V Vo=15V Vo=24V			7 5 5 5 5 5	%Vo
Settling Time (< 1% Vout nominal)		All			500	µs
Turn-On Delay and Rise Time						
Turn-On Delay Time	Power applied first, then enable	All		25	75	ms
Turn-On Delay Time	Enable first, then power applied	All		100	250	ms
Output Voltage Rise Time	10%V_{o_set} to 90%V_{o_set}	All		10	50	ms

EFFICIENCY

PARAMETER	CONDITIONS	Device	Min.	Typical	Max.	Units
Full Load	V_{in}=Nominal V_{in}, TA=25°C	QB22S3.3-30 QB22S5-20 QB22S12-8.3 QB22S15-6.7 QB22S24-4.17 QB45S3.3-30 QB45S5-20 QB45S12-8.3 QB45S15-6.7 QB45S24-4.17		86 86.5 86.5 86.5 87 88 88 88 88 88 88		%

ISOLATION CHARACTERISTICS

PARAMETER	CONDITIONS	Model	Min.	Typical	Max.	Units
Isolation Voltage	1minute	All			1500	Volts
Isolation Resistance		All	10			MΩ
Isolation Capacitance		All		1000		pF

FEATURE CHARACTERISTICS

PARAMETER	CONDITIONS	Model	Min.	Typical	Max.	Units
Switching Frequency		24 Vin 48 Vin		220 250		KHz
On/Off Control, Positive Remote On/Off logic						
Logic Low (Module Off)	$V_{on/off}$ at $I_{on/off}$=1.0mA	All	-0.1		1.8	V
Logic Low (Module On)	$V_{on/off}$ at $I_{on/off}$=0.0uA	All	3.5 or Open Circuit		75	V
On/Off Control, Negative Remote On/Off logic						
Logic High (Module Off)	$V_{on/off}$ at $I_{on/off}$=0.0uA	All	3.5 or Open Circuit		75	V
Logic Low (Module On)	$V_{on/off}$ at $I_{on/off}$=1.0mA	All	-0.8		1.8	V
On/Off Current Sink (for both remote on/off logic)	$I_{on/off}$ at $V_{on/off}$=0.0V	All		0.3	1	mA
On/Off Current Source (for both remote on/off logic)	Logic High, $V_{on/off}$=15V	All			1	mA
MTBF	I_o=100% of $I_{o\ max}$; T_a=25°C per MIL-HDBK-217F	All		600,000		Hours
Weight		All		66		grams

POWER DERATING

The operating case temperature range of this QB series is -40°C to +100°C. When operating this QB series, proper derating or cooling is needed. The maximum case temperature under any operating condition should not exceed + 100°C.

Forced Convection Power De-rating without Heat Sink
Example (without heatsink):

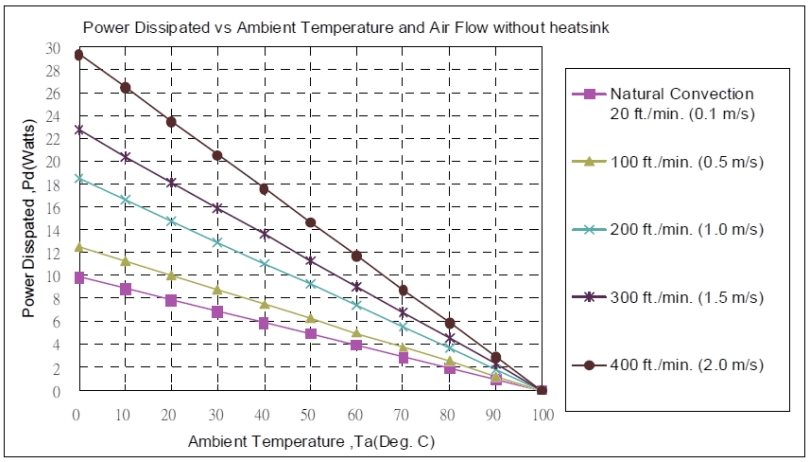

AIR FLOW RATE	TYPICAL R_{ca}
Natural Convection 20ft./min. (0.1m/s)	10.1 °C /W
100 ft./min. (0.5m/s)	8.0 °C /W
200 ft./min. (1.0m/s)	5.4 °C /W
300 ft./min. (1.5m/s)	4.4 °C /W
400 ft./min. (2.0m/s)	3.4 °C /W

What is the minimum airflow necessary for a QB48S5-20 operating at nominal line voltage, an output current of 20A, and a maximum ambient temperature of 40°C?

Solution:
Given:
Vin =48Vdc, Vo=5Vdc, Io=20A

Determine Power dissipation (Pd):
Pd = Pi-Po=Po(1-η)/η
Pd = 5V×20A×(1-0.88)/0.88=13.64 Watts

Determine airflow:
Given: Pd =13.64W and Ta=40°C

Check Power Derating curve:
Airflow ≦ 400 ft./min.

Verify:
The maximum temperature rise:
△T = Pd × Rca=13.64×3.4=46.4°C
The maximum case temperature
Tc=Ta+△T=86.4°C <100°C

Where:
Rca is thermal resistance from case to ambience.
Ta is ambient temperature and the Tc is case temperature

Example (with heatsink M-C421)

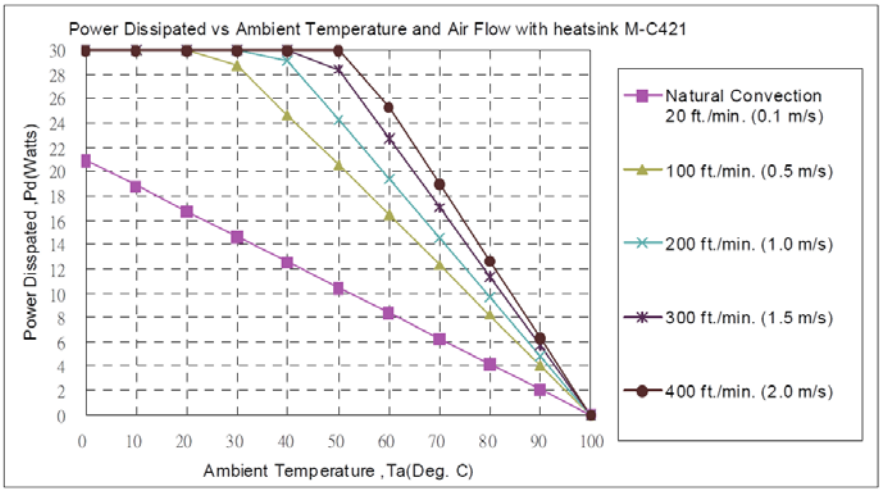

AIR FLOW RATE	TYPICAL R_{ca}
Natural Convection 20ft./min. (0.1m/s)	4.78 °C/W
100 ft./min. (0.5m/s)	2.44 °C/W
200 ft./min. (1.0m/s)	2.06 °C/W
300 ft./min. (1.5m/s)	1.76 °C/W
400 ft./min. (2.0m/s)	1.58 °C/W

What is the minimum airflow necessary for a QB45S5-20 operating at nominal line voltage, an output current of 20A, and a maximum ambient temperature of 40°C?

Solution:

Given:

Given: Vin=48Vdc, Vo=5Vdc, Io=20A

Determine Power dissipation (P_d):

$Pd = Pi-Po=Po(1-\eta)/\eta$

$Pd = 5.0\times20\times(1-0.88)/0.88 = 13.64$Watts

Determine airflow:

Given: Pd=13.64W and Ta=40°C

Check Power de-rating curve:

Airflow ≦ 100 ft./min.

Verify:

The maximum temperature rise $\Delta T = Pd \times Rca = 13.64\times2.44=33.28$°C

The maximum case temperature $Tc = Ta+\Delta T = 73.28$°C <100°C

Where:

R_{ca} is thermal resistance from case to ambient environment.

T_a is ambient temperature and T_c is case temperature.

QUARTER BRICK HEAT SINKS:

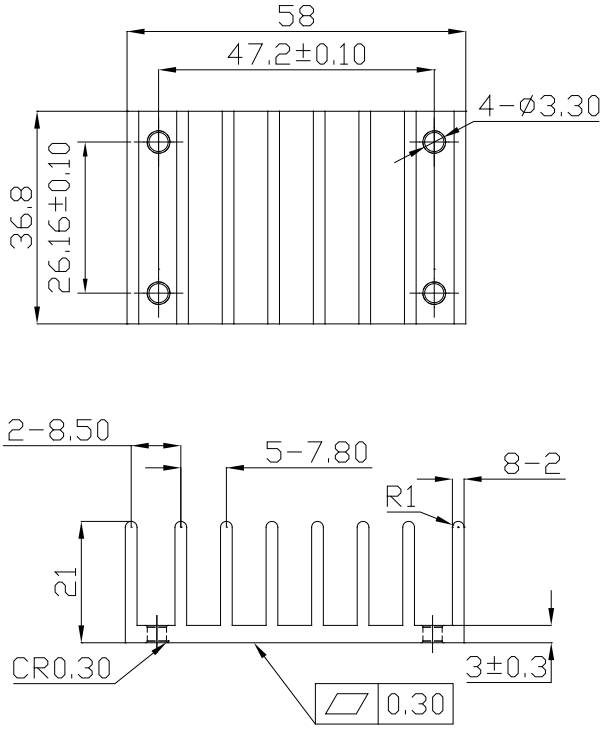

M-C421 (G6620510201)
Transverse Heat Sink

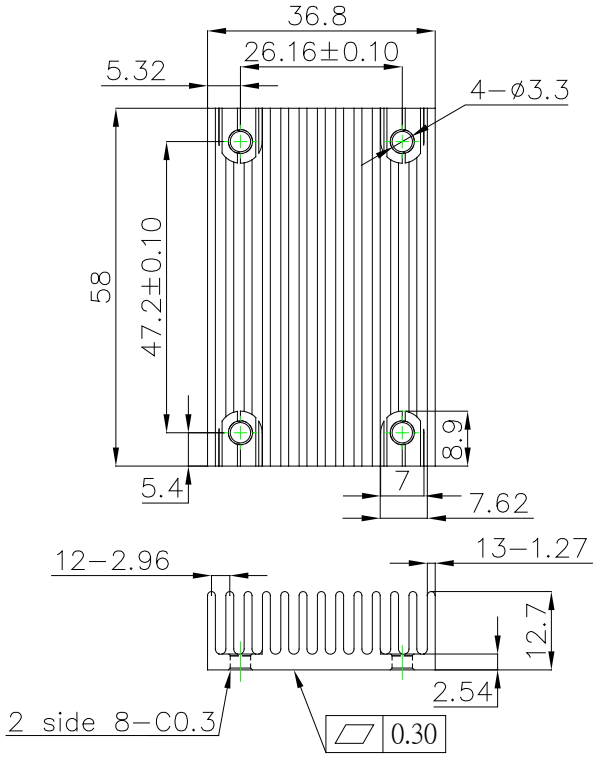

M-C488 (G6620570202)
Longitudinal Heat Sink

All Dimensions in mm

Rca: 4.78°C/W (typ.), At natural convection
2.44°C/W (typ.), At 100LFM
2.06°C/W (typ.), At 200LFM
1.76°C/W (typ.), At 300LFM
1.58°C/W (typ.), At 400LFM

Rca: 5.61°C/W (typ.), At natural convection
4.01°C/W (typ.), At 100LFM
3.39°C/W (typ.), At 200LFM
2.86°C/W (typ.), At 300LFM
2.49°C/W (typ.), At 400LFM

THERMAL PAD: SZ 35.8*56.9*0.25 mm (G6135041041)
SCREW: SMP+SW M3*8L (G75A1300322)

EFFICIENCY vs. LOAD

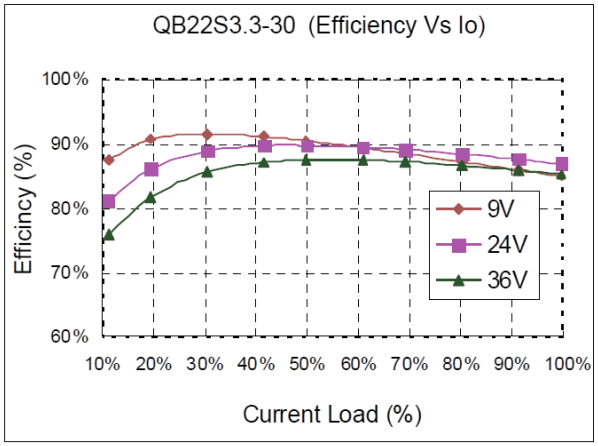

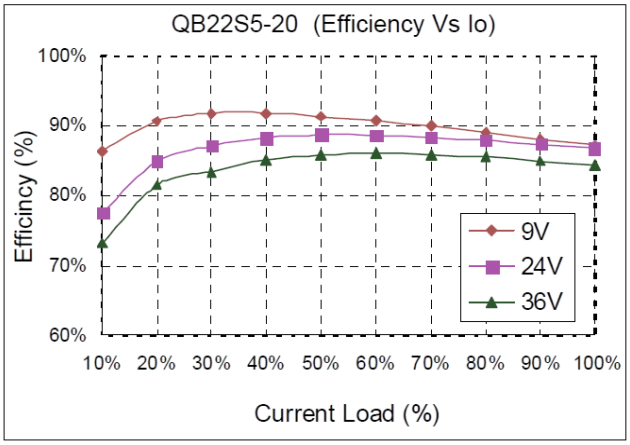

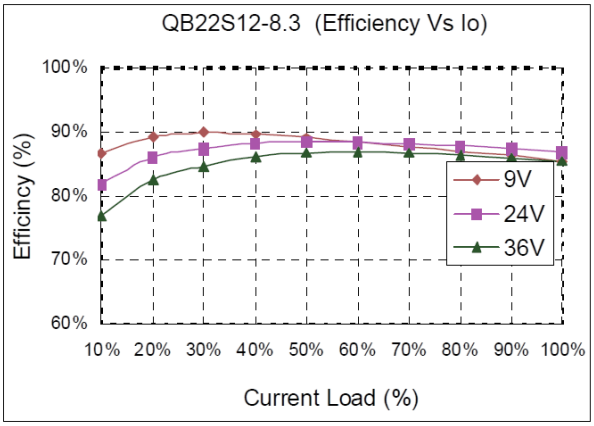

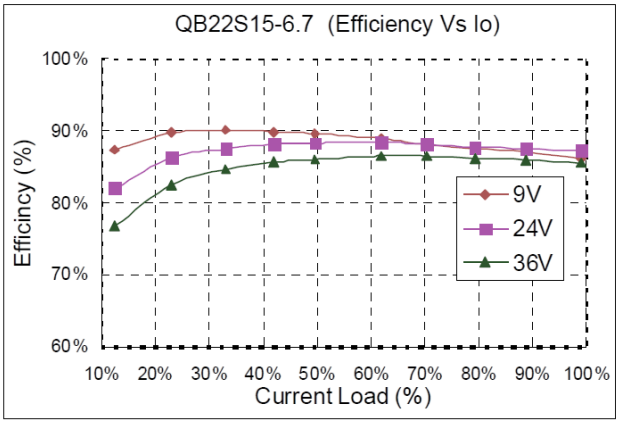

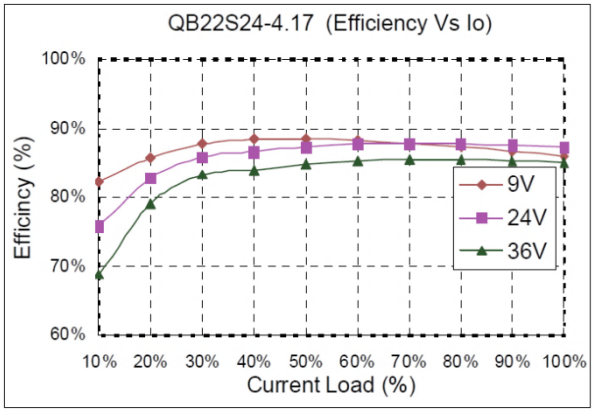

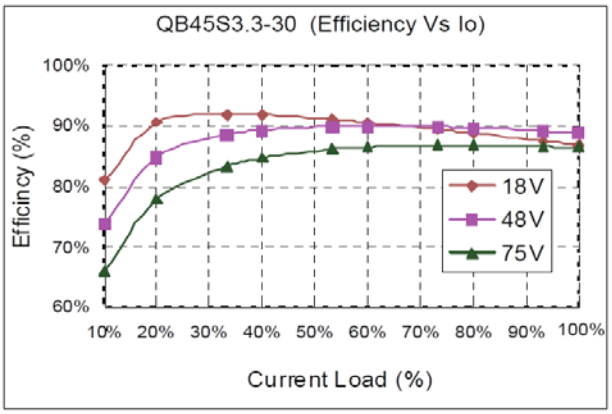

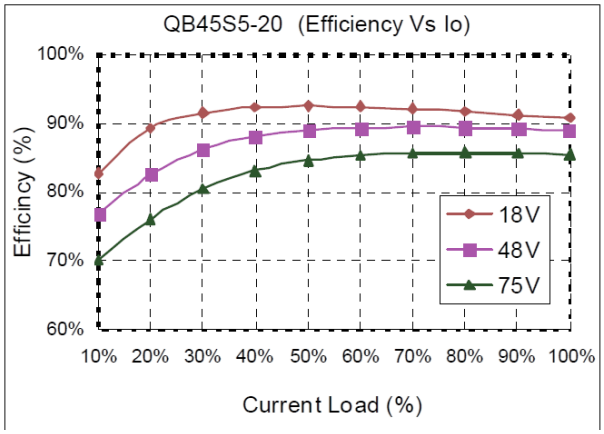

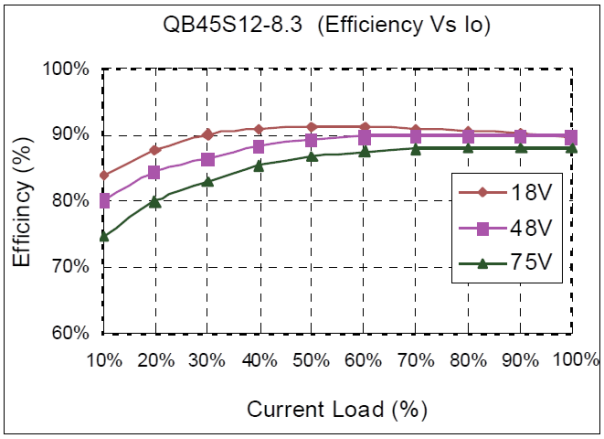

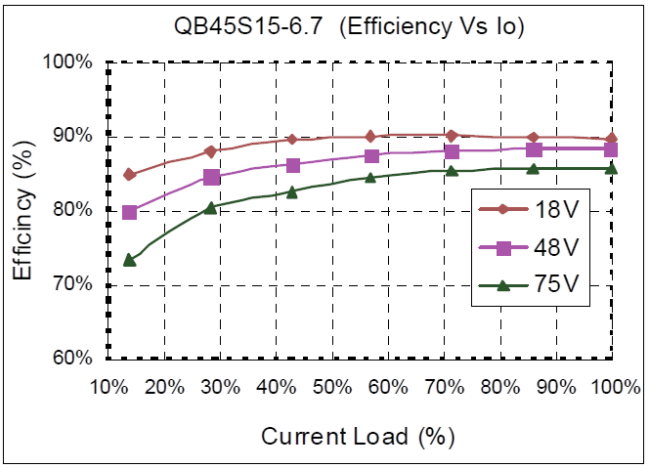
QB45S15-6.7 (Efficiency Vs Io)
100%
90%
80%
70%
60%
Efficincy (%)
10% 20% 30% 40% 50% 60% 70% 80% 90% 100%
Current Load (%)
18V
48V
75V

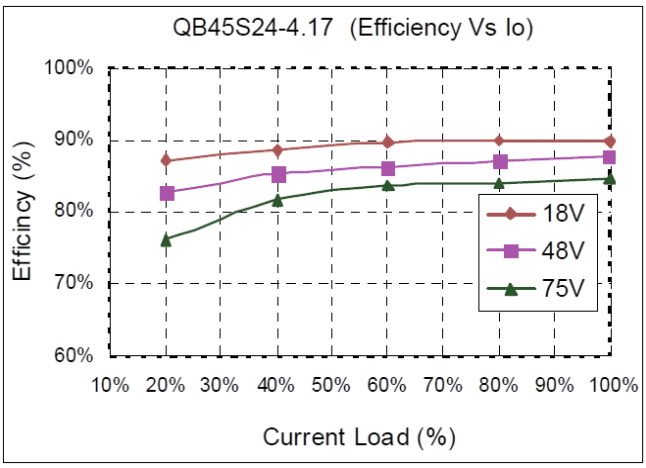
QB45S24-4.17 (Efficiency Vs Io)
100%
90%
80%
70%
60%
Efficincy (%)
10% 20% 30% 40% 50% 60% 70% 80% 90% 100%
Current Load (%)
18V
48V
75V

Operating Temperature Range

This QB series of converters can be operated over a wide case temperature range of -40°C to + 100°C. Consideration must be given to the derating curves when maximum power is drawn from the converter. The maximum power drawn from open half brick models is influenced by multiple factors, such as:

- Input voltage range
- Output load current
- Forced air or natural convection

Output Voltage Adjustment

The next page describes in detail how to trim the output voltage with respect to its set point. The output voltage on all models is adjustable within the range of +10% to –10%.

Over Current Protection

All models have internal over current and continuous short circuit protection. Once the fault condition is removed, the unit will operate normally. The converter will go into hiccup mode protection once the point of current limit inception is reached.

Output Overvoltage Protection

The output overvoltage protection consists of circuitry that internally limits the output voltage. If more accurate output over voltage protection is required then an external circuit can be used via the Remote On/Off pin.

Remote On/Off

The QB series allows the user to switch the module on and off electronically with the remote on/off feature. All models are available in “positive logic” and “negative logic” (optional) versions. The converter turns on if the remote on/off pin is high (>3.5Vdc or open circuit). Setting the pin low (<1.8VDC) will turn the Converter off. The signal level of the remote on/off input is defined with respect to ground. If not using the remote on/off pin, leave the pin open (converter will be on). Models with part number suffix “N” are the “negative logic” remote on/off version. The unit turns off if the remote on/off pin is high (>3.5Vdc or open circuit). The converter turns on if the on/off pin input is low (<1.8VDC). The converter is off by default. If not using the remote on/off feature, leave the ON/OFF pin open for positive logic, and short the ON/OFF pin to VIN(-) for negative logic.

UVLO (Under voltage Lock Out)

Input under voltage lockout is standard on the QB unit. The unit will shut down when the input voltage drops below a threshold, and the unit will operate when the input voltage goes above the upper threshold.

Over Temperature Protection

These modules have an over temperature protection circuit to safeguard against thermal damage. Shutdown occurs with the maximum case reference temperature is exceeded. The module will restart when the case temperature falls below over temperature shutdown threshold.

PCB Foot print, Recommended Layout, and Soldering Information

The user of the converter must ensure that other components and metal in the vicinity of the converter meet the spacing requirements to which the system is approved. Low resistance and low inductance PCB layout traces should be used where possible. Careful consideration must also be given to proper low impedance tracks between power module, input and output grounds. The recommended footprints and soldering profiles are shown in the next two figures

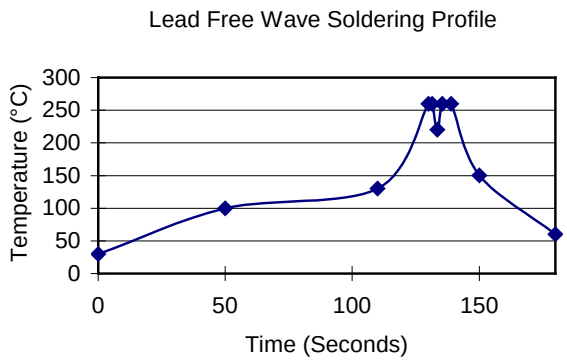

Note：

1. Soldering Materials: Sn/Cu/Ni
2. Ramp up rate during preheat: 1.4 °C/Sec (From+ 50°C to +100°C)
3. Soaking temperature: 0.5 °C/Sec (From +100°C to+ 130°C), 60 ± 20 seconds
4. Peak temperature: +260°C, above+ 250°C 3~6 Seconds
5. Ramp up rate during cooling: -10.0 °C/Sec (From+ 260°C to +150°C)

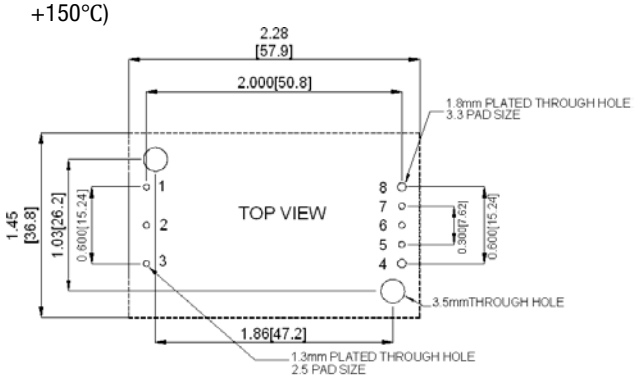

Convection Requirements for Cooling

To predict the approximate cooling needed for the Quarter brick module, refer to the power derating curves. These derating curves are approximations of the ambient temperatures and airflows required to keep the power module temperature below its maximum rating. Once the module is assembled in the actual system, the module’s temperature should be monitored to ensure it does not exceed +100°C as measured at the center of the top of the case (thus verifying proper cooling).

Thermal Considerations

The power module operates in a variety of thermal environments; however, sufficient cooling should be provided to help ensure reliable operation of the unit. Heat is removed by conduction, convection, and radiation to the surrounding environment. The power output of the module should not be allowed to exceed rated power (V_{o_set} x I_{o_max}). The power modules have through-threaded, M3 x0.5 mounting holes, which enable heat sinks or cold plates to be attached to the module. Thermal de-rating with heat sinks is expressed by using the overall thermal resistance of the module (R_{ca}).

TEST SET-UP

The basic test set-up to measure parameters such as efficiency and load regulation is shown below. When testing the modules under any transient conditions please ensure that the transient response of the source is sufficient to power the equipment under test.
We can calculate:

- Efficiency
- Load regulation
- Line regulation.

The value of efficiency is defined as:

$$\eta = \frac{V_o \times I_o}{V_{in} \times I_{in}} \times 100\%$$

Where:

V_o is output voltage,
I_o is output current,
V_{in} is input voltage,
I_{in} is input current.

The value of load regulation is defined as:

$$\text{Load.reg} = \frac{V_{FL} - V_{NL}}{V_{NL}} \times 100\%$$

Where:

V_{FL} is the output voltage at full load
V_{NL} is the output voltage at no load

The value of line regulation is defined as:

$$\text{Line.reg} = \frac{V_{HL} - V_{LL}}{V_{LL}} \times 100\%$$

Where:

V_{HL} is the output voltage of maximum input voltage at full load.
V_{LL} is the output voltage of minimum input voltage at full load.

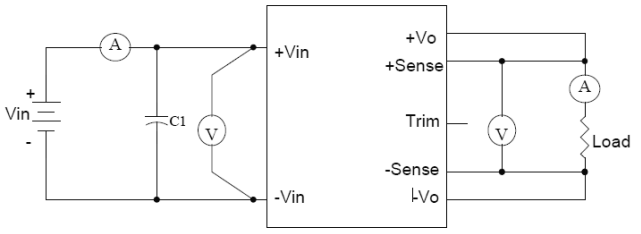

QB Series Test Setup

Output Voltage Adjustment

The Trim input permits the user to adjust the output voltage up or down 10%. This is accomplished by connecting an external resistor between the Trim pin and either the VO(+) pin or the VO(-) pin (COM pin)

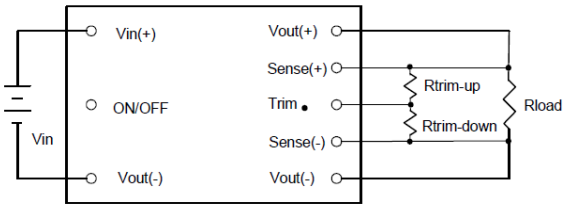

Output voltage trim circuit configuration

The Trim pin should be left open if trimming is not being used. Connecting an external resistor (Rtrim-down) between the Trim pin and the Vout(-) (or Sense(-)) pin decreases the output voltage. The following equation determines the required external resistor value to obtain a down percentage output voltage change of Δ%

$$R_{trim-down} = \left[\frac{511}{\Delta\%} - 10.22\right] k\Omega$$

Where:

$$\Delta\% = \left(\frac{V_{o,set} - V_{desired}}{V_{o,set}}\right) \times 100$$

For example, to trim-down the 12 V output voltage of QB45S12-8.3 module by 5% to 11.4V, Rtrim-down is calculated as follow:
Δ%=5

$$R_{trim-down} = \left(\frac{511}{5} - 10.22\right) k\Omega$$

$$R_{trim-down} = 91.98 k\Omega$$

In order to trim the voltage up, connecting an external resistor (Rtrim-up) between the Trim pin and the Vout (+) (or Sense (+)) pin increases the output voltage. The following equations determine the required external resistor value to obtain a percentage output voltage change of Δ%

$$R_{trim-up} = \left[\frac{5.11 V_{out}(100+\Delta\%)}{1.225 \times \Delta\%} - \frac{511}{\Delta\%} - 10.22\right] k\Omega$$

$$R_{trim-up} = 936.74 k\Omega$$

Output Remote Sensing

This QB series converter has the capability to remotely sense both lines of its output. This feature moves the effective output voltage regulation point from the output of the unit to the point of connection of the remote sense pins. This feature automatically adjusts the real output voltage of the QB series in order to compensate for voltage drops in distribution and maintain a regulated voltage at the point of load. The remote-sense voltage range is: [(+V_{out}) - (-V_{out})] – [(+Sense) – (-Sense)] ≦ 10% of $V_{o_nominal}$

If the remote sense feature is not to be used, the sense pins should be connected locally. The +Sense pin should be connected to the +Vout pin at the module and the -Sense pin should be connected to the -Vout pin at the module. This is shown in the schematic below.

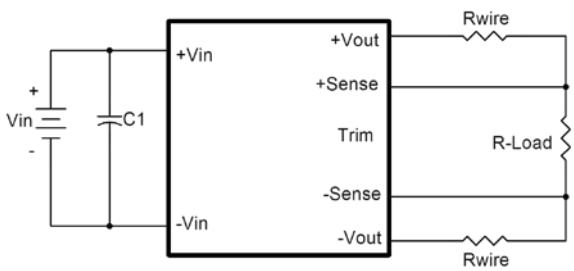

Note:

Although the output voltage can be varied (increased or decreased) by both remote sense and trim, the maximum variation for the output voltage is the larger of the two values not the sum of the values. The output power delivered by the module is defined as the voltage at the output terminals multiplied by the output current. Using remote sense and trim can cause the output voltage to increase and consequently increase the power output of the module if output current remains unchanged. Always ensure that the output power of the module remains at or below the maximum rated power. Also be aware that if $V_{o.set}$ is below nominal value, $P_{out.max}$ will also decrease accordingly because $I_{o.max}$ is an absolute limit. Thus, $P_{out.max} = V_{o.set} \times I_{o.max}$ is also an absolute limit.

Output Ripple and Noise

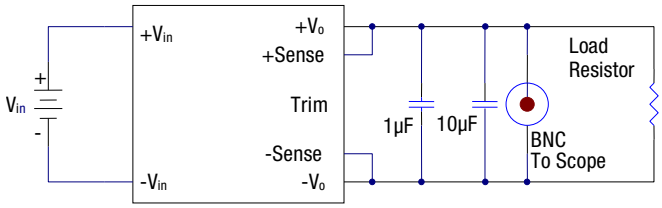

Output ripple and noise is measured with 10µF tantalum and 1µF ceramic capacitors across the output.

Output Capacitance

The QB series converters provide unconditional stability with or without external capacitors. For good transient response, low ESR output capacitors should be located close to the point of load. PCB design emphasizes low resistance and inductance tracks in consideration of high current applications. Output capacitors with their associated ESR values have an impact on loop stability and bandwidth. DATEL converters are designed to work with load capacitance to meet the technical specification.

SAFETY and EMC

Input Fusing and Safety Considerations

This QB series of converters have no internal fuse. In order to achieve maximum safety and system protection, always use an input line fuse. We recommended a time delay fuse 15A. It is recommended that the circuit have a transient voltage suppressor diode (TVS) across the input terminal to protect the unit against surge or spike voltage and input reverse voltage (as shown).

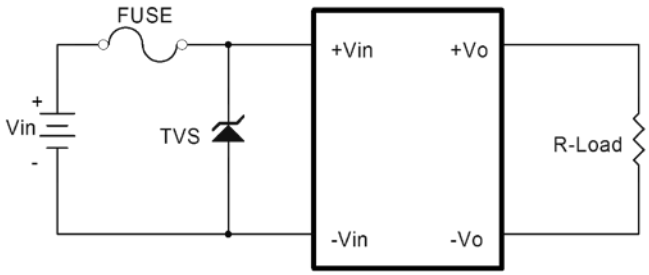

EMC Considerations

(1) EMI Test standard: EN55022 Class A Conducted Emission
Test Condition: Input Voltage: Nominal, Output Load: Full Load

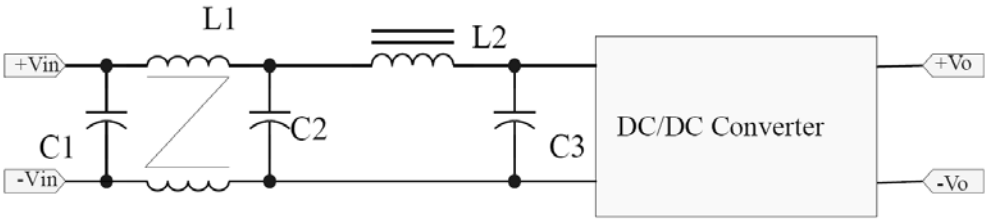

Model No.	C1	C2	C3	L1	L2
QB45S3.3-25	150µF/100V	150µF/100V	NC	0.5mH	Short
QB45S5-20	150µF/100V	150µF/100V	NC	0.5mH	Short
QB45S12-8.3	150µF/100V	150µF/100V	NC	0.5mH	Short
QB45S15-6.7	150µF/100V	150µF/100V	NC	0.5mH	Short
QB45S24-4.17	150µF/100V	150µF/100V	NC	0.5mH	Short

Note: C1, C2 Aluminum Capacitors NIPPON-CHEMICON KY Series

EMI and conducted noise meet EN55022 Class A

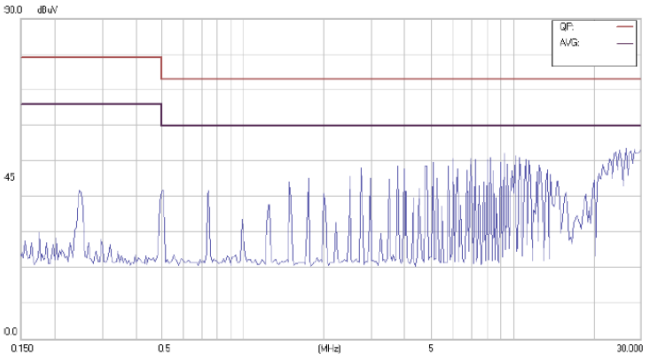

Conducted Class A Test for QB45S3.3-30

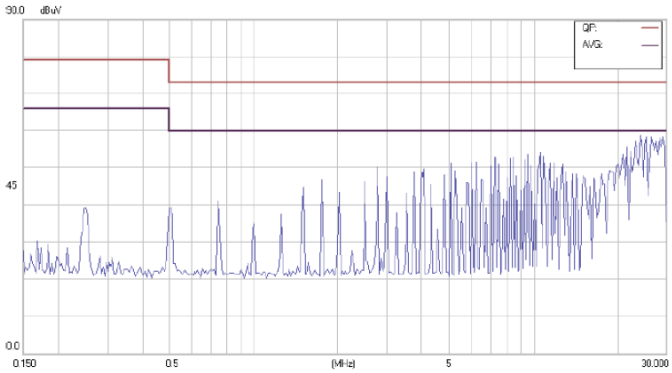

Conducted Class A QB45S5-20

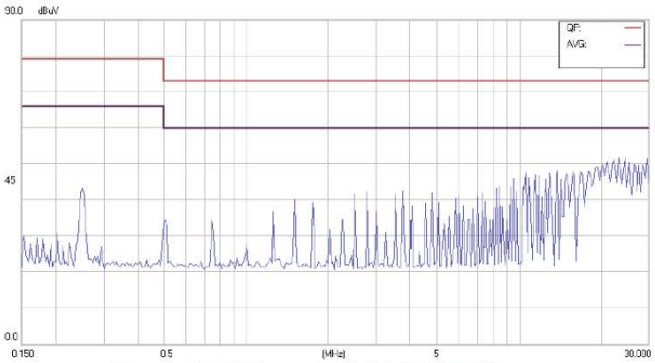

Conducted Class A of QB45S12-8.3

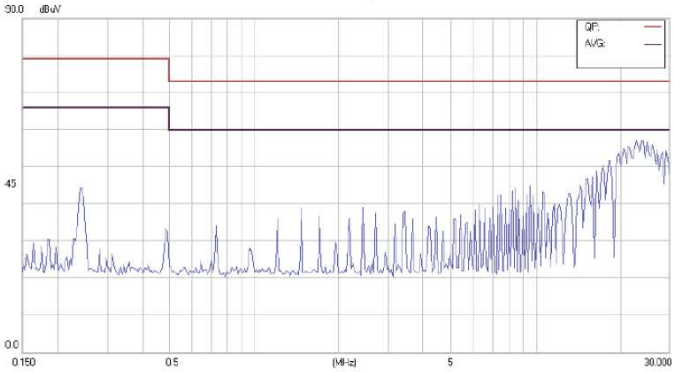

Conducted Class A QB45S15-6.7

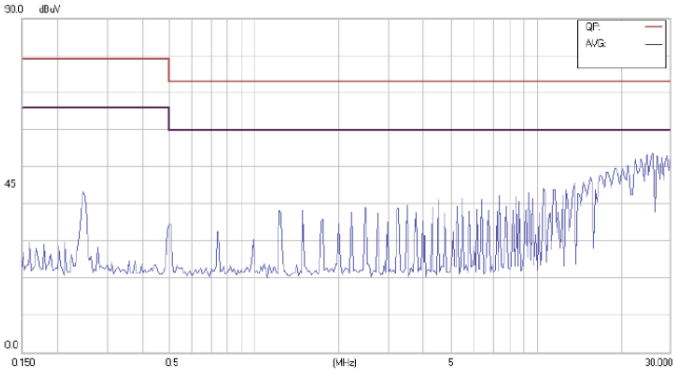

Conducted Class A of QB45S24-4.17

MECHANICAL SPECIFICATIONS

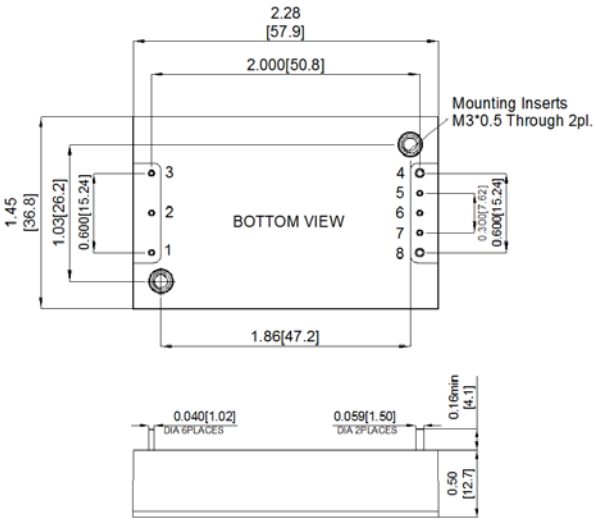

Note: All dimensions are in inches (millimeters). Tolerance: x.xx ±0.02 in. (0.5mm), x.xxx ±0.010 in. (0.25 mm) unless otherwise noted

PIN CONNECTIONS

PIN CONNECTIONS	
PIN	**SINGLE OUTPUT**
1	+ V Input
2	On/Off
3	- V Input
4	-V output
5	-Sense
6	Trim
7	+ Sense
8	+ V Output

PART NUMBER ORDERING INFORMATION

Family, Form, Factor Package	Nominal Input voltage	Number of Outputs	Voltage Output Volts		Current Output (A)	Options
QB	22	S	5	—	20	N, M, H1, H2

- **Nominal Input voltage**: (9 to 36 V) - 22 Volts; (18 to 75 V) – 45 Volts
- **Voltage Output Volts**: 3.3 Volts, 5 Volts, 12 Volts, 15 Volts, 24 Volts
- **Current Output (A)**: 3.3 Volts - 30A; 5 Volts - 20A; 12 Volts – 8.3A; 15 Volts – 6.7A; 24 Volts – 4.17A
- **Options**: None – Positive On/Off Control; N - Negative On/Off control; M – Clear Mounting Insert; H1- for Transverse Heatsink; H2- for Longitudinal Heatsink

Note: For proper part ordering, enter option suffixes in order listed in table above

DATEL is a registered Trademark of DATEL, Inc.
120 Forbes Boulevard, Suite 125, Mansfield, MA 02048 USA
ITAR and ISO 9001/2015 REGISTERED

DATEL, Inc. makes no representation that the use of its products in the circuits described herein, or the use of other technical information contained herein, will not infringe upon existing or future patent rights. The descriptions contained herein do not imply the granting of licenses to make, use, or sell equipment constructed in accordance therewith. Specifications are subject to change without notice.