QBR SERIES Quarter-Brick

Up to 150 Watts DC-DC Converter

FEATURES

- Isolated Output up to 150 Watts
- Wide input range (43 – 160 VDC)
- Regulated Outputs
- Efficiency up to 92%
- Remote On/Off
- Continuous Short Circuit Protection
- -40 ^{0}C to +105 ^{0}C
- Voltage/Current/Over-temperature Protection
- Quarter Brick Dimension
- Meet Industrial Standard
- Designed to meet UL60950-1 2nd Basic insulation IEC60950-1 and EN50155
- Fire & Smoke Meets EN45545-2
- CE Mark Meets 2014/30/EU

PRODUCT OVERVIEW

This QBR railway series offers up to 150 watts of output power housed in an industry standard quarter-brick package with high power density. This QBR series features wide input voltage range from 43 to 160VDC (110 Volts nominal), high efficiency isolation of 3000VDC and provide a precise regulated voltage output.

All QBR models operate over the temperature range of – 40°C to +105°C. The modules offer Input under voltage lock out (UVLO), and are fully protected against output overvoltage and over temperature conditions. All models have internal over current and continuous short circuit protection. The output voltage can be trimmed to the required voltage and the product includes remote on/off function.

This QBR series provides efficiency up to 92%, meet industrial standard and is the best choice for railway system, industrial, distributed power architectures, telecommunications, and mobile applications.

Please contact DATEL if your application requires different output voltage or any other special feature.

APPLICATIONS:

- Railway Systems
- Distributed Power Systems
- Mobile equipment
- Telecommunications

AVAILABLE OPTIONS

- Customizable Input/ Output voltages
- Heatsink, customizable packaging
- UL/CSA60950-1
- CE Mark 2004/108/EC

MODEL NUMBER	INPUT VOLTAGE	OUTPUT VOLTAGE	OUTPUT CURRENT MAX	EFFICIENCY %	LOAD REGULATION	OPTIONS
QBR101S5-30	43 - 160 VDC	5VDC	30 A	91	± 0.2 %	N, M
QBR113S12-12.5	43 - 160 VDC	12VDC	12.5 A	92	± 0.2 %	N, M
QBR101S24-6.3	43 - 160 VDC	24VDC	6.3 A	89	± 0.2 %	N, M
QBR101S28-5.4	43 - 160 VDC	24VDC	5.4 A	89	± 0.2 %	N, M
QBR101S24-3.2	43 - 160 VDC	24VDC	3.2 A	90.5	± 0.2 %	N, M

BLOCK DIAGRAM

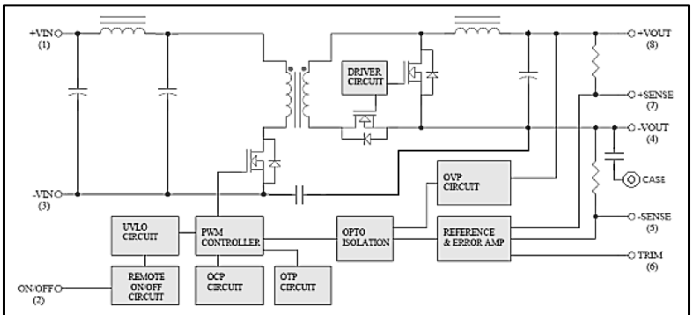

Block Diagram for 5Vout and 12Vout

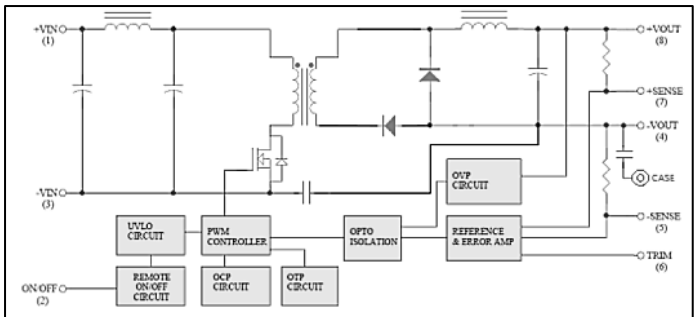

Block Diagram for other modules

ABSOLUTE MAXIMUM RATINGS

PARAMETER	CONDITIONS	Model	Min.	Typical	Max.	Units
Input Voltage						
Continuous	DC	All	-0.3		160	Volts
Transient	100ms, DC	All			200	Volts
Operating Case Temperature		All	-40		+105	°C
Storage Temperature		All	-55		+125	°C
Isolation Voltage	1 minute; input/output, DC	All			3000	Volts
	1 minute; input/case, DC				2250	
	1 minute; output/case, DC	All			500	

Stresses above the absolute maximum ratings can cause permanent damage to the device.

FUNCTIONAL SPECIFICATIONS

The following specifications apply over the operating temperature range, under the following conditions TA = +25°C unless otherwise specified

INPUT CHARACTERISTICS

PARAMETER	CONDITIONS	Model	Min.	Typical	Max.	Units
Operating Input Voltage	**DC**	All	43	110	160	Volts
Input Under-voltage Lockout						
Turn-On Voltage Threshold	DC	All	40.5	41.5	42.5	Volts
Turn-Off Voltage Threshold	DC	All	37	38	39	Volts
Lockout Hysteresis Voltage	DC	All		3.5		Volts
Maximum Input Current	100% Load, V_{in}= 110V	All		1500		mA
No-Load Input Current	V_{in}=Nominal	Vo=5.0V Vo=12V Vo=24V Vo=28V Vo=48V		10 10 10 10 10		mA
Input Filter	Pi Filter	All				
Inrush Current (I^2t)		All			0.1	A^2s
Input Reflected Ripple Current	P-P thru 12µH inductor, 5Hz to 20MHz	All		30		mA

OUTPUT CHARACTERISTICS

PARAMETER	CONDITIONS	Device	Min.	Typical	Max.	Units
Output Voltage Set Point	V_{in}=Nominal V_{in}, I_o = I_{o_max}, Tc=25°C VDC	Vo=5.0 V Vo=12 V Vo=24 V Vo=28 V Vo=48V	4.95 11.88 23.76 27.72 47.52	5 12 12 28 48	5.05 12.12 24.24 28.28 48.48	Volts
Output Voltage Regulation						
Load Regulation	I_o=I_{o_min} to I_{o_max}	All			±0.2	%
Line Regulation	V_{in}=low line to high line	All			±0.2	%
Temperature Coefficient	TC=-40°C to 100°C	All			±0.02	%/°C
Output Voltage Ripple and Noise (5Hz to 20MHz bandwidth)						
Peak-to-Peak	Full load, 10µF tantalum and 1.0uF ceramic capacitors	Vo=5V Vo=12V Vo=24V Vo=28V Vo=48V			100 150 280 280 480	mV
RMS	Full load, 10µF solid tantalum and 1.0µF ceramic capacitors	Vo=5.0V Vo=12V Vo=24V Vo=28V Vo=48V			40 60 100 100 200	mV
Operating Output Current Range		Vo=5.0V Vo=12V Vo=24V Vo=28V Vo=48V	0 0 0 0 0		30 12.5 6.3 5.4 3.2	A
Output DC Current Limit Inception	Vo = 90% Nominal Output Voltage	All	110	125	160	%
Maximum Output Capacitance	Full resistive load	Vo=3.3V Vo=5.0V Vo=12V Vo=24V Vo=28V	0 0 0 0 0		3000 0 1250 0 6300 5400 1000	µF
Output Voltage Trim Range	Maximum Power	All	-10		+10	%
Output Over Voltage Protection		All	115	125	140	%

DYNAMIC CHARACTERISTICS

PARAMETER	CONDITIONS	Model	Min.	Typical	Max.	Units
Output Voltage Current Transient						
Step Change in Output Current	75% to 100% of I_{o_max}	All			±5	%
Setting Time (within 1% Vout nominal)	d_i/d_t=0.1A/µs	All			200	µs
Turn-On Delay and Rise Time						
Turn-On Delay Time from On/Off	$V_{on/off}$ to 10%V_{o_set}	All		30		ms
Turn-On Delay Time from Input	$V_{in\ min}$ to 10%V_{o_set}	All		30		ms
Output Voltage Rise Time	10%V_{o_set} to 90%V_{o_set}	All		30		ms

EFFICIENCY

PARAMETER	CONDITIONS	Device	Min.	Typical	Max.	Units
Full Load	V_{in}=Nominal V_{in}, Tc=25°C	Vo=5V		91		%
		Vo=12V		92		
		Vo=24V		89		
		Vo=28V		89		
		Vo=48V		90.5		

ISOLATION CHARACTERISTICS

PARAMETER	CONDITIONS	Model	Min.	Typical	Max.	Units
Isolation Voltage	1minute; input/output,	All			3000	Volts
	1minute; input/case,	All			2250	
	1 minute; output/case	All			500	
Isolation Resistance	input/output,	All	100			MΩ
Isolation Capacitance	input/case,	All		1500		pF
Isolation Capacitance	Intput/case	All		NC		pF
Isolation Capacitance	output/case	Vo=5V		470		pF
		Vo=12V		10000		pF
		Vo=24V		3000		pF
		Vo=28V		3000		pF
		Vo=48 V		10000		pF

FEATURE CHARACTERISTICS

PARAMETER	CONDITIONS	Model	Min.	Typical	Max.	Units
Switching Frequency		All	270	300	330	KHz
On/Off Control, Positive Remote On/Off logic						
Logic Low (Module Off)	$V_{on/off}$ at $I_{on/off}$=1.0mA	All			1.2	V
Logic High (Module On)	$V_{on/off}$ at $I_{on/off}$=0.0uA	All	3.5 or Open Circuit		160	V
On/Off Control, Negative Remote On/Off logic						
Logic High (Module Off)	$V_{on/off}$ at $I_{on/off}$=0.0uA	All	3.5 or Open Circuit		160	V
Logic Low (Module On)	$V_{on/off}$ at $I_{on/off}$=1.0mA	All			1.2	V
On/Off Current (for both remote on/off logic)	$I_{on/off}$ at $V_{on/off}$=0.0V	All		0.3	1	mA
Leakage Current (for both remote on/off logic)	Logic High, $V_{on/off}$=15V	All			30	µA
Off Converter Input Current	Shutdown input idle current	All		5	10	mA
Output Voltage Trim Range	P_{out}=max rated power	All	-10		+10	%
Output Over Voltage Protection		All	115	125	140	%
Over-Temperature Recovery				100		°C
Over-Temperature Shutdown		All		110		°C

GENERAL SPECIFICATIONS

PARAMETER	NOTES and CONDITIONS	Device	Min.	Typical	Max.	Units
MTBF	I_o=100% of $I_{o\ max}$; T_a=25°C per MIL-HDBK-217F	Vo=5V Vo=12V Vo=24V Vo=28V Vo=48V		720 720 840 840 840		K hours
Weight		All		68		grams
Pin Materials	Base: Copper; Plating: Nickel with Matte Tin					
Case Materials	Plastic, DAP					
Base Plate Materials	Aluminum					
Potting Materials	UL 94V-0					
Altitude	3000m Operating Altitude, 12000m Transport Altitude					
Radiated Immunity	Meet EN61000-4-3 Level 3: 80~1000MHz, 20V/m Perf. Criteria A					
EMI ESD	Meets EN55011, EN55022 & EN50155 with external input filter, EN55032 Class A					
	Meet EN61000-4-2 Air ±8KV Perf. Criteria A					
Fast Transient	Meet EN61000-4-4 ±2KV Perf. On power input port, ±2kV, external input capacitor Perf. Criteria A					
Surge	EN61000-4-5 Level 4: Line to earth, ±4kV, Line to line, ±2kV. Perf. Criteria A					
Conducted Immunity	Meet EN61000-4-6 Level 3: 0.15~80MHz, 10V Perf. Criteria A					
Thermal Shock	MIL-STD-810F					
Shock/Vibration	Meet MIL-STD-810F / EN61373					
Environmental	Meet EN50155(EN60068-2-1, EN60068-2-2, EN60068-2-30)					
Interruptions of Voltage Supply	EN50155 10ms Interruptions, Class S2					
Supply Change over	EN50155 During a supply break of 30 ms; Class C2					
Humidity	95% RH max. Non Condensing					

POWER DERATING

The operating case temperature range of this QBR series is -40°C to +105°C. When operating this QBR series, proper derating or cooling is needed. The maximum case temperature under any operating condition should not exceed + 105°C.

Forced Convection Power De-rating without Heat Sink
Example (without heatsink):

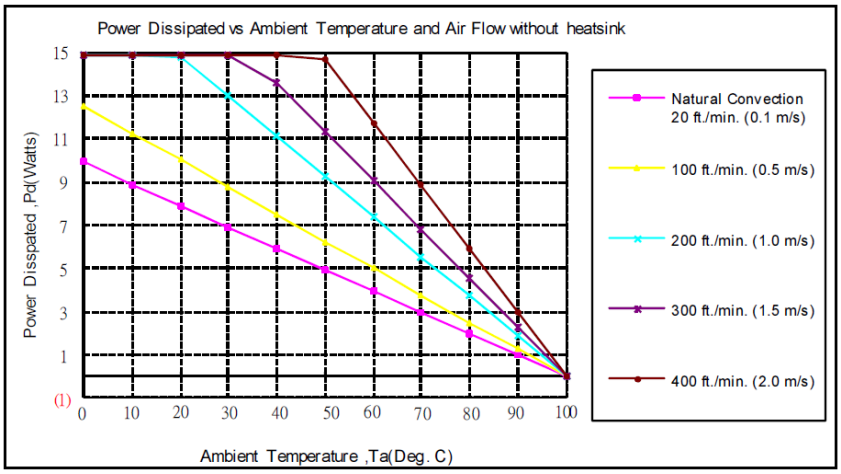

AIR FLOW RATE	TYPICAL R_{ca}
Natural Convection 20ft./min. (0.1m/s)	10.1 °C /W
100 ft./min. (0.5m/s)	8.0 °C /W
200 ft./min. (1.0m/s)	5.4 °C /W
300 ft./min. (1.5m/s)	4.4 °C /W
400 ft./min. (2.0m/s)	3.4 °C /W

What is the minimum airflow necessary for a QBR101S12-12.5 operating at nominal line voltage, an output current of 12.5A, and a maximum ambient temperature of 50°C?

Solution:
Given:
Vin =110Vdc, Vo=12Vdc, Io=12.5A

Determine Power dissipation (Pd):
Pd =Pi-Po=Po(1-η)/η
Pd =12V×12.5A×(1-0.91)/0.91=14.84 Watts

Determine airflow:
Given: Pd =14.84W and Ta=50°C

Check Power Derating curve:
Minimum airflow= 400 ft./min.

Verify:
Maximum temperature rise is
ΔT = Pd × Rca = 14.84W×3.4=50.46°C.

Maximum case temperature is
Tc=Ta + ΔT = 100.46°C <100°C.

Where:
Rca is thermal resistance from case to ambient environment.
Ta is ambient temperature and Tc is case temperature.

Example (with heatsink M-C421)

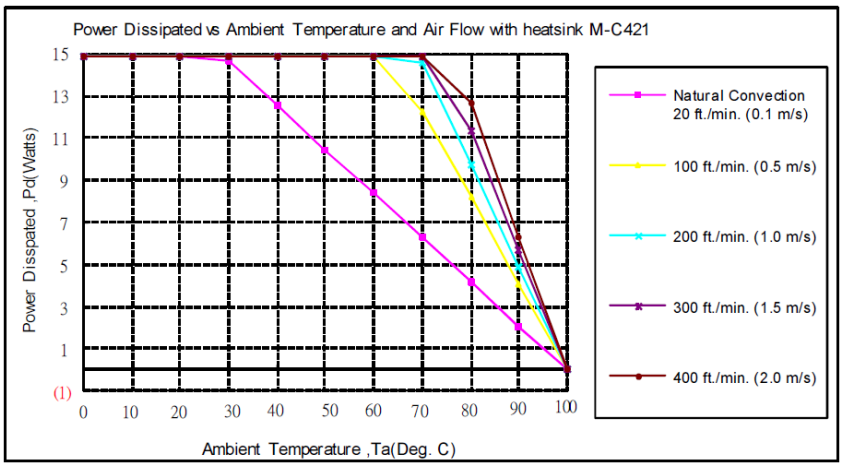

AIR FLOW RATE	TYPICAL R_{ca}
Natural Convection 20ft./min. (0.1m/s)	4.78 °C/W
100 ft./min. (0.5m/s)	2.44 °C/W
200 ft./min. (1.0m/s)	2.06 °C/W
300 ft./min. (1.5m/s)	1.76 °C/W
400 ft./min. (2.0m/s)	1.58 °C/W

What is the minimum airflow necessary for a QBR101S12-12.5 operating at nominal line voltage, an output current of 12.5A, and a maximum ambient temperature of 60℃?

Solution:

Given:

$Vin=110V_{dc}$, $Vo=12V_{dc}$, Io=12.5A

Determine Power dissipation (P_d):

$Pd=Pi-Po=Po(1-\eta)/\eta$

$Pd=12\times12.5\times(1-0.91)/0.91=14.84$Watts

Determine airflow:

Given: Pd=14.84W and Ta=60℃

Check above Power de-rating curve:

$P_d<12.6W$, Natural Convection

Verify:

Maximum temperature rise is

$\Delta T = P_d \times R_{ca}=14.84\times2.44=36.21℃$

Maximum case temperature is $T_c=T_a+\Delta T=96.21℃ <105℃$

Where:

R_{ca} is thermal resistance from case to ambient environment.
T_a is ambient temperature and T_c is case temperature.

QUARTER BRICK HEAT SINKS:

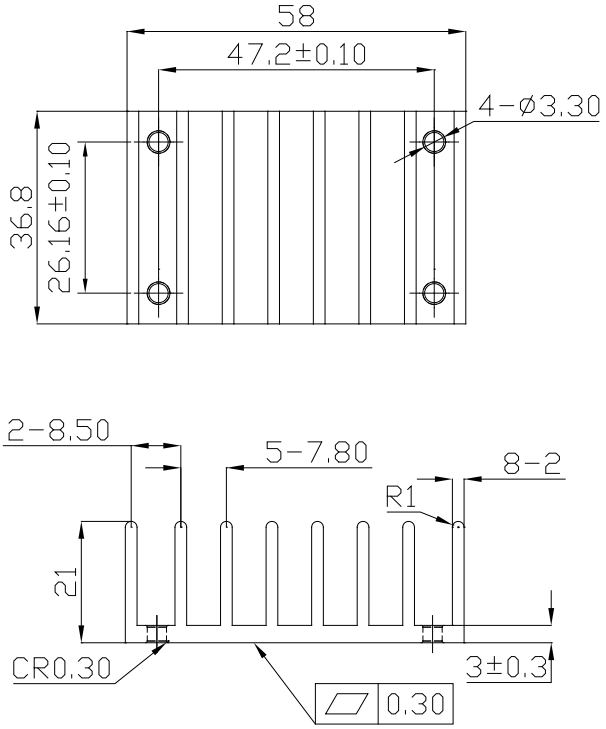

M-C421 (G6620510201)
Transverse Heat Sink

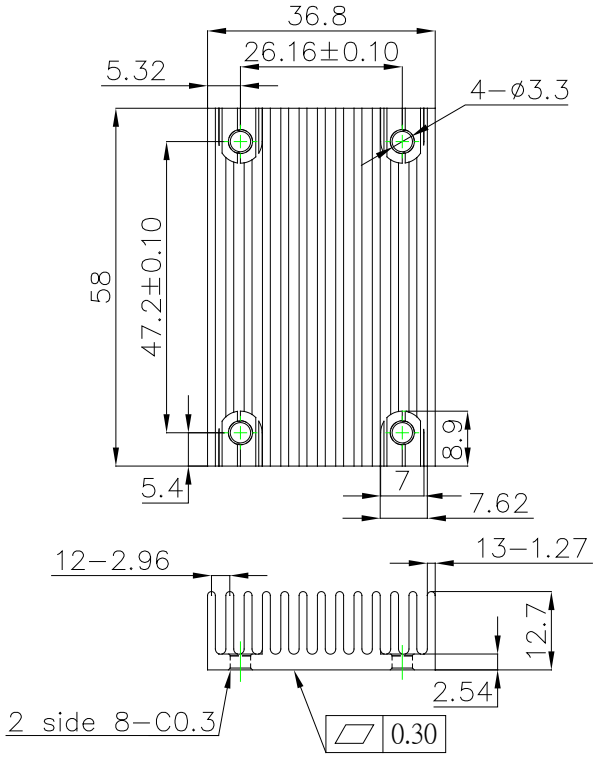

M-C488 (G6620570202)
Longitudinal Heat Sink

All Dimensions in mm

Rca: 4.78°C/W (typ.), At natural convection
2.44°C/W (typ.), At 100LFM
2.06°C/W (typ.), At 200LFM
1.76°C/W (typ.), At 300LFM
1.58°C/W (typ.), At 400LFM

Rca: 5.61°C/W (typ.), At natural convection
4.01°C/W (typ.), At 100LFM
3.39°C/W (typ.), At 200LFM
2.86°C/W (typ.), At 300LFM
2.49°C/W (typ.), At 400LFM

THERMAL PAD: SZ 35.8*56.9*0.25 mm (G6135041041)
SCREW: SMP+SW M3*8L (G75A1300322)

EFFICIENCY vs. LOAD

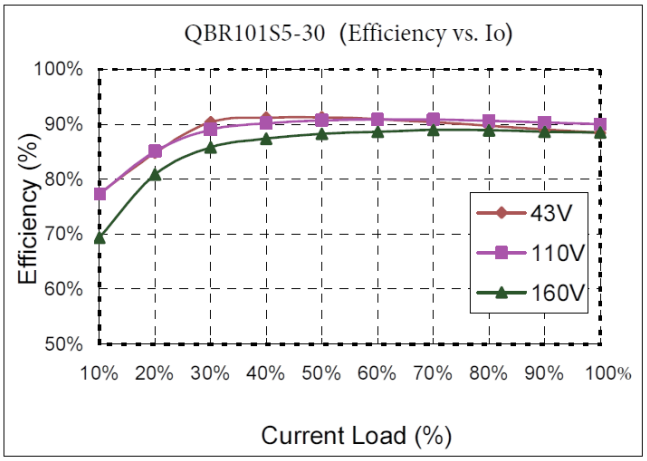

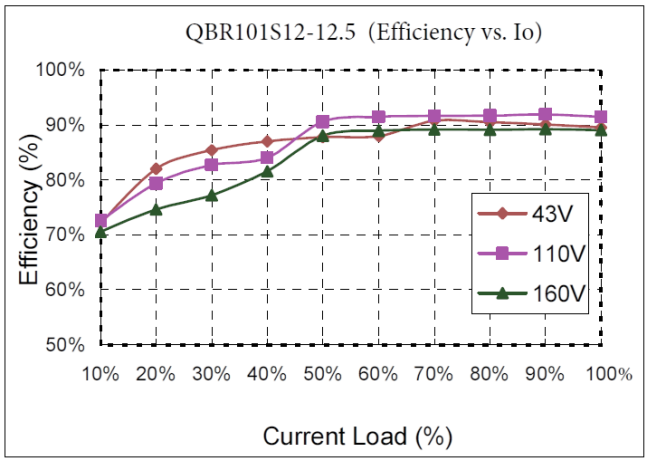

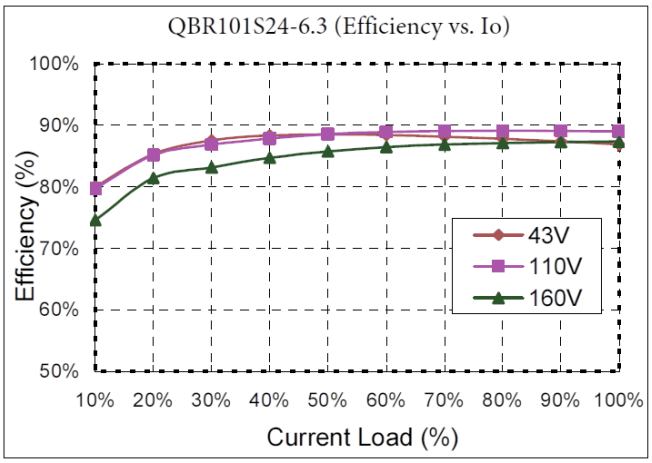

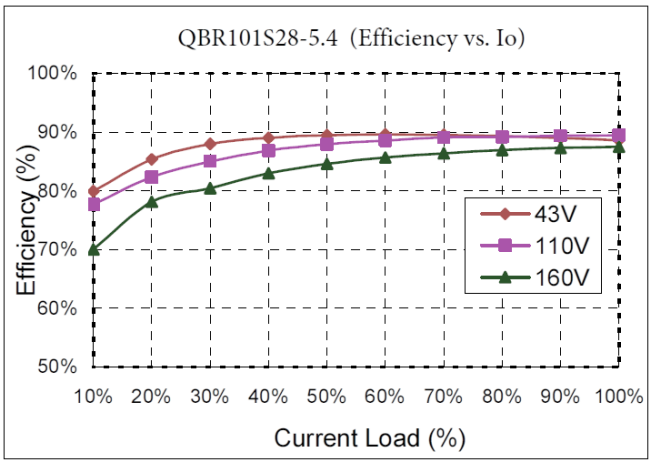

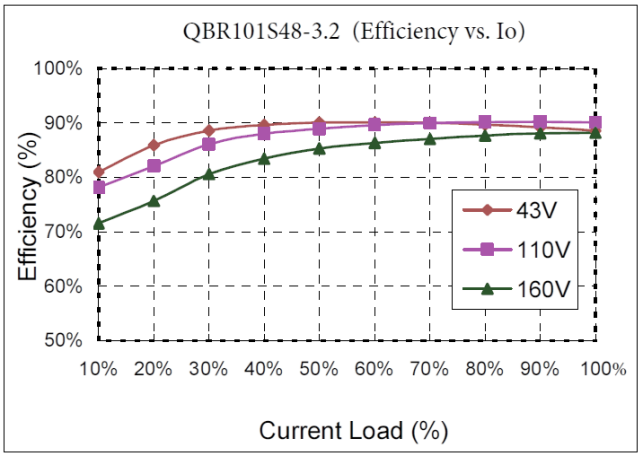

Operating Temperature Range

The QBR series converters can be operated over a wide case temperature range of -40°C to + 105°C. Consideration must be given to the derating curves when maximum power is drawn from the converter. The maximum power drawn from open half brick models is influenced by multiple factors, such as:

- Input voltage range
- Output load current
- Forced air or natural convection

Output Voltage Adjustment

The Trim section describes in detail how to trim the output voltage with respect to its set point. The output voltage on all models is adjustable within the range of +10% to –10%.

Over Current Protection

All models have internal over current and continuous short circuit protection. Once the fault condition is removed, the unit will operate normally. The converter will go into hiccup mode protection once the point of current limit inception is reached.

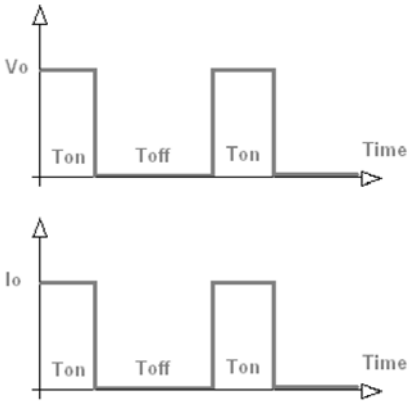

Output Overvoltage Protection

The output overvoltage protection consists of circuitry that internally limits the output voltage. If more accurate output over voltage protection is required then an external circuit can be used via the Remote On/Off pin.

Note: The device inside the power supply might fail when voltage more than rate output voltage is applied to output pin. This could happen when the customer tests the over voltage protection of unit.

Remote On/Off

This QBR series allows the user to switch the module on and off electronically with the remote On/Off feature. All models are available in "positive logic" and "negative logic" (optional) versions. The converter turns on if the remote On/Off pin is high (>3.5Vdc to 160Vdc or open circuit). Setting the pin low (0 to<1.2Vdc) will turn the converter off. The signal level of the remote On/Off input is defined with respect to ground. If not using the remote On/Off pin, leave the pin open (converter will be on). Models with part number suffix "N" are the "negative logic" remote On/Off version. The unit turns off if the remote On/Off pin is high (>3.5Vdc to 160Vdc or open circuit). The converter turns on if the On/Off pin input is low (0 to<1.2Vdc). Note that the converter is off by default.

Logic State (Pin 2)	Negative Logic	Positive Logic
Logic Low – Switch Closed	Module on	Module off
Logic High – Switch Open	Module off	Module on

UVLO (Under voltage Lock Out)

Input under voltage lockout is standard on the QBR unit. The unit will shut down when the input voltage drops below a threshold, and the unit will operate when the input voltage goes above the upper threshold.

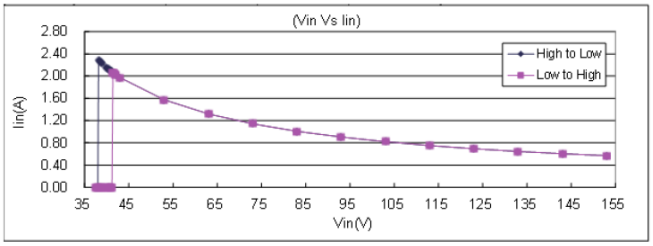

Over Temperature Protection

These modules have an over temperature protection circuit to safeguard against thermal damage. Shutdown occurs with the maximum case reference temperature is exceeded. The module will restart when the case temperature falls below over temperature shutdown threshold. It is recommended to measure case temperature at the center part of aluminum base plate.

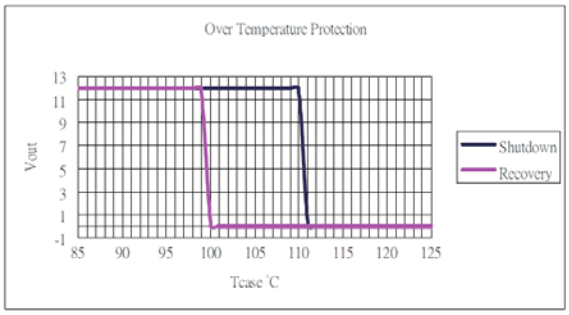

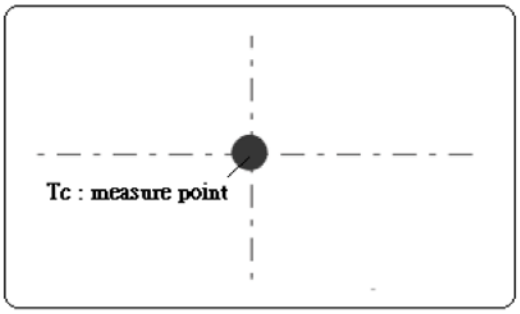

PCB Foot print, Recommended Layout, and Soldering Information

The end user of the converter must ensure that other components and metal in the vicinity of the converter meet the spacing requirements to which the system is approved. Low resistance and low inductance PCB layout traces should be used where possible. Careful consideration must also be given to proper low impedance tracks between power module, input and output grounds. The recommended footprints and

soldering profiles are shown in the next three figures

Lead Free Wave Soldering Profile

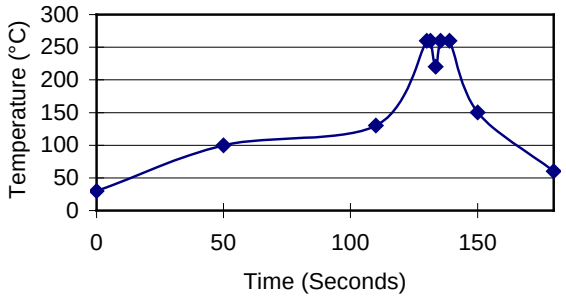

Note：

1. Soldering Materials: Sn/Cu/Ni
2. Ramp up rate during preheat: 1.4 °C/Sec (From+ 50°C to +100°C)
3. Soaking temperature: 0.5 °C/Sec (From +100°C to+ 130°C), 60 ± 20 seconds
4. Peak temperature: +260°C, above+ 250°C 3~6 Seconds
5. Ramp up rate during cooling: -10.0 °C/Sec (From+ 260°C to +150°C)

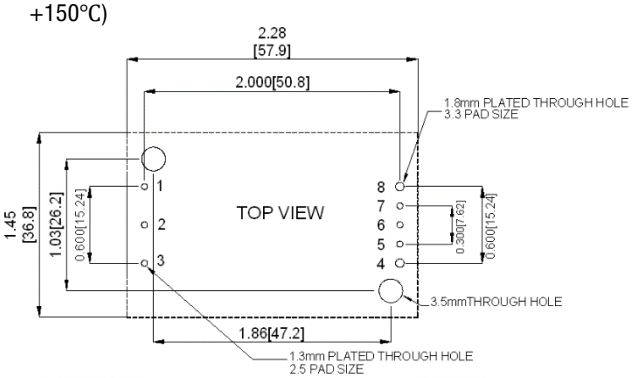

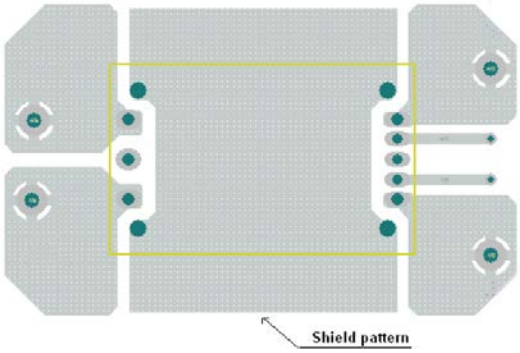

Convection Requirements for Cooling

To predict the approximate cooling needed for the Quarter brick module, refer to the power derating curves. These derating curves are approximations of the ambient temperatures and airflows required to keep the power module temperature below its maximum rating. Once the module is assembled in the actual system, the module's temperature should be monitored to ensure it does not exceed +105°C as measured at the center of the top of the case (thus verifying proper cooling).

Thermal Considerations

The power module operates in a variety of thermal environments; however, sufficient cooling should be provided to help ensure reliable operation of the unit. Heat is removed by conduction, convection, and radiation to the surrounding environment. The power output of the module should not be allowed to exceed rated power (V_{o_set} x I_{o_max}). The power modules have through-threaded, M3 x0.5 mounting holes, which enable heat sinks or cold plates to be attached to the module. Thermal de-rating with heat sinks is expressed by using the overall thermal resistance of the module (R_{ca}).

Connection for standard use

The connection for standard use is shown below. An external input capacitor (C1) 220uF for all models is recommended to reduce input ripple voltage. External output capacitors (C2, C3) are recommended to reduce output ripple and noise, 10uF aluminum and 1uF ceramic capacitors for 48Vout, and 10uF tantalum and 1uF ceramic capacitors for other models.

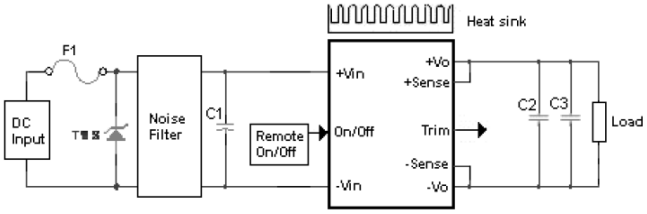

Symbol	Component
F1, TVS	Input fuse, TVS
C1	External capacitor on input side
C2,C3	External capacitor on the output side
Noise Filter	External input noise filter
Remote On/Off	External Remote On/Off control
Trim	External output voltage adjustment
Heat sink	External heat sink
+Sense/-Sense	--

Note: If the impedance of input line is high, C1 capacitance must be more than above. Use more than two recommended capacitor above in parallel when ambient temperature becomes lower than -20 ℃.

Input Capacitance at the Power Module

The converters must be connected to low AC source impedance. To avoid problems with loop stability source inductance should be low. Also, the input capacitors (Cin) should be placed close to the converter input pins to decouple distribution inductance. However, the external input capacitors are chosen for suitable ripple handling capability.

Low ESR capacitors are good choice. Circuit as shown as below represents typical measurement methods for reflected ripple current. C1 and L1 simulate a typical DC source impedance. The input reflected-ripple current is measured by current probe to oscilloscope with a simulated source Inductance (L1).

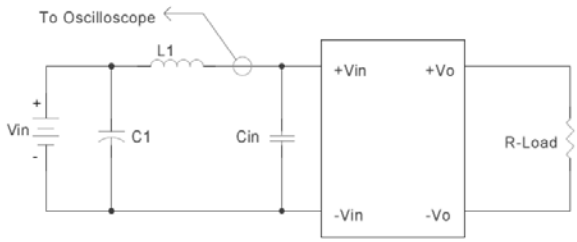

L1: 12uH
C1: 220uF ESR<0.075ohm @100KHz
Cin: 220uF ESR<0.07ohm @100KHz

TEST SET-UP

The basic test set-up to measure parameters such as efficiency and load regulation is shown below. When testing the modules under any transient conditions please ensure that the transient response of the source is sufficient to power the equipment under test.
We can calculate:

- Efficiency
- Load regulation
- Line regulation.

The value of efficiency is defined as:

$$\eta = \frac{V_o \times I_o}{V_{in} \times I_{in}} \times 100\%$$

Where:

V_o is output voltage,
I_o is output current,
V_{in} is input voltage,
I_{in} is input current.

The value of load regulation is defined as:

$$\text{Load.reg} = \frac{V_{FL} - V_{NL}}{V_{NL}} \times 100\%$$

Where:

V_{FL} is the output voltage at full load
V_{NL} is the output voltage at no load

The value of line regulation is defined as:

$$\text{Line.reg} = \frac{V_{HL} - V_{LL}}{V_{LL}} \times 100\%$$

Where:

V_{HL} is the output voltage of maximum input voltage at full load.
V_{LL} is the output voltage of minimum input voltage at full load.

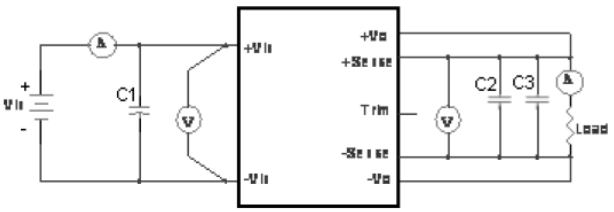

QBR Series Test Setup

C1: 220uF/200V ESR<0.035Ω

C2: 1uF/1210 ceramic capacitor

C3: 10uF aluminum capacitor for 48Vout. 10uF tantalum capacitor for others.

Output Voltage Adjustment

Output may be externally trimmed (±10%) with a fixed resistor or an external trim pot as shown (optional). Model specific formulas for calculating trim resistors are available upon request as a separate document.

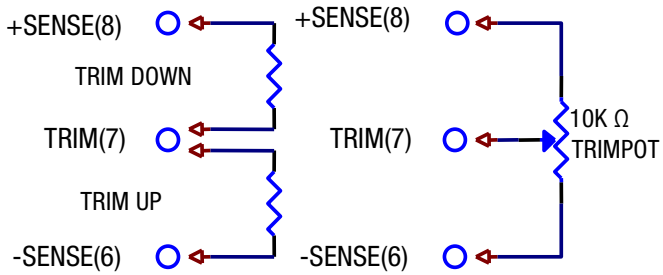

In order to trim the voltage up or down, one needs to connect the trim resistor either between the trim pin and -Vo for trim-up or between trim pin and +Vo for trim-down. The output voltage trim range is ±10%. This is shown:

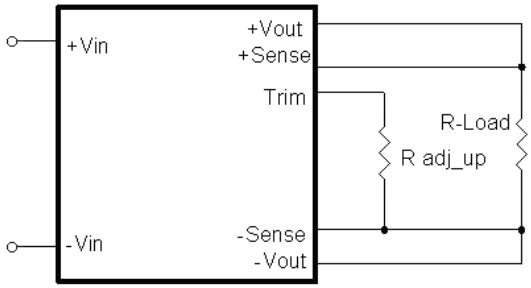

Trim-up Voltage Setup

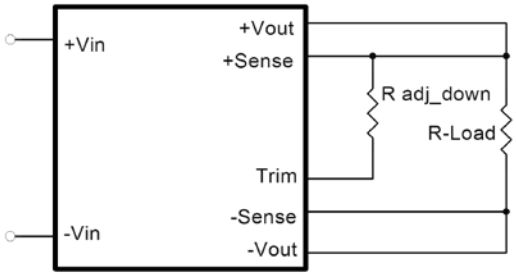

Trim-down Voltage Setup

V_{out} (V)	R1 (KΩ)	R2 (KΩ)	R3 (KΩ)	V_r (V)	V_f (V)
5V	2.32	3.3	0	2.5	0
12V	9.1	51	5.1	2.5	0.46
24V	20	100	7.5	2.5	0.46
28V	23.7	150	6.2	2.5	0.46
48V	36	270	5.1	2.5	0.46

Trim Resistor Values

The value of Rtrim_up is defined as:

For Vo = 5V Rtrim_up decision:

$$R_{trim_up} = \frac{R_1 V_r}{Vo - V_{o_nom}} - R_2 \quad (K\Omega)$$ Where:

For others Rtrim_up decision:

$$R_{trim_up} = \left(\frac{R_1\left(V_r - V_f\left(\frac{R_2}{R_2+R_3}\right)\right)}{Vo - V_{o_nom}}\right) - \frac{R_2 R_3}{R_2+R_3} \ (\mathrm{K\Omega})$$

Where:

R_{trim_up} is the external resistor in KΩ.
V_{o_nom} is the nominal output voltage.
V_o is the desired output voltage.
R1, R2, R3 and V_r are internal components.

For example, to trim-up the output voltage of QBR101S12-12.5, 12V output module by 5% to 12.6V, R_{trim_up} is calculated as follows:

$V_o - V_{o_nom} = 12.6 - 12 = 0.6V$
R1 = 9.1 KΩ , R2 = 51 KΩ, R3 = 5.1KΩ
V_r= 2.5 V, V_f=0.46 V

$$R_{trim_up} = \frac{18.944}{0.6} - 4.636 = 26.94\ (\mathrm{K\Omega})$$

The value of R_{trim_down} defined as:

$$R_{trim_down} = \frac{R_1 \times (V_o - V_r)}{V_{o_nom} - V_o} - R_2 \ (\mathrm{K\Omega})$$

Where:

R_{trim_down} is the external resistor in KΩ.
V_{o_nom} is the nominal output voltage.
V_o is the desired output voltage.
R1, R2, R3 and V_r are internal components.

For example: to trim-down the output voltage of QBR101S12-12.5, 12V module by 5% to 11.4V, R_{trim_down} is calculated as follows:

$V_{o_nom} - V_o = 12 - 11.4 = 0.6$ V
R1 = 9.1 KΩ, R2 = 51 KΩ, V_r = 2.5 V

$$R_{trim_down} = \frac{9.1 \times (11.4 - 2.5)}{0.6} - 51 = 83.98\ (\mathrm{K\Omega})\cdot$$

The Typical value of R trim_up

	5V	12V	24V	28V	48V
Trim up %	R_{trim_up} (KΩ)				
1%	112.7	153.2	165.7	168.3	148.6
2%	54.70	74.30	79.36	81.16	71.81
3%	35.37	47.99	50.58	52.12	46.21
4%	25.70	34.83	36.19	37.60	33.40
5%	19.90	26.94	27.56	28.86	25.72
6%	16.03	21.68	21.80	23.08	20.60
7%	13.27	17.92	17.69	18.93	16.94
8%	11.20	15.10	14.61	15.82	14.20
9%	9.589	12.91	12.21	13.40	12.07
10%	8.300	11.15	10.29	11.47	10.36

The typical value of R trim_down

	5V	12V	24V	28V	48V
Trim down %	R_{trim_down}(KΩ)				
1%	110.4	660.3	1671	1984	3106
2%	52.38	300.1	775.8	905.5	1400
3%	33.05	180.0	477.2	545.8	831.5
4%	23.38	120.0	327.9	365.9	547.1
5%	17.58	83.99	238.3	258.0	376.5
6%	13.71	59.97	178.6	186.0	262.8
7%	10.95	42.82	136.0	134.6	181.5
8%	8.880	29.95	104.0	96.10	120.6
9%	7.269	19.95	79.07	66.12	73.17
10%	5.980	11.94	59.17	42.14	35.25

Output Remote Sensing

This QBR series converter has the capability to remotely sense both lines of its output. This feature moves the effective output voltage regulation point from the output of the unit to the point of connection of the remote sense pins. This feature automatically adjusts the real output voltage of the QBR series in order to compensate for voltage drops in distribution and maintain a regulated voltage at the point of load. The remote-sense voltage range is: [(+V_{out}) - (-V_{out})] – [(+Sense) – (-Sense)] ≦ 10% of $V_{o_nominal}$

When remote sense is in use, the sense should be connected by twisted-pair wire or shield wire. If the sensing patterns short, heave current flows and the pattern may be damaged. Output voltage might become unstable because of impedance of wiring and load condition when length of wire is exceeding 400mm. This is shown in the schematic below.

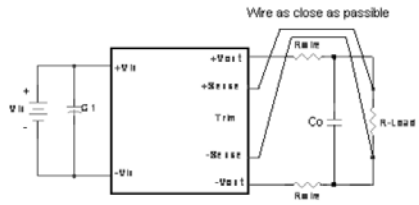

If the remote sense feature is not to be used, the sense pins should be connected locally. The +Sense pin should be connected to the +Vout pin at the module and the -Sense pin should be connected to the -Vout pin at the module. Wire between +Sense and +Vout and between -Sense and –Vout as short as possible. Loop wiring should be avoided. The converter might become unstable by noise coming from poor wiring. This is shown in the schematic below.

If the remote sense feature is not to be used, the sense pins should be connected locally. The +Sense pin should be connected to the +Vout pin at the module and the -Sense pin should be connected to the -Vout pin at the module. Wire between +Sense and +Vout and between -Sense and –Vout as short as possible. Loop wiring should be avoided. The converter might become unstable by noise coming from poor wiring. This is shown in the schematic below.

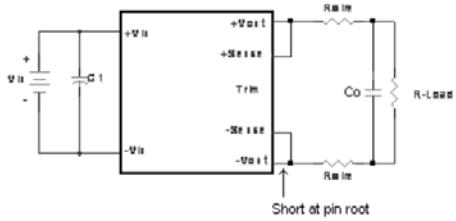

Note:

Although the output voltage can be varied (increased or decreased) by both remote sense and trim, the maximum variation for the output voltage is the larger of the two values not the sum of the values. The output power delivered by the module is defined as the voltage at the output terminals multiplied by the output current. Using remote sense and trim can cause the output voltage to increase and consequently increase the power output of the module if output current remains unchanged. Always ensure that the output power of the module remains at or below the maximum rated power. Also be aware that if $V_{o.set}$ is below nominal value, $P_{out.max}$ will also decrease accordingly because $I_{o.max}$ is an absolute limit. Thus, $P_{out.max} = V_{o.set} \times I_{o.max}$ is also an absolute limit.

Output Ripple and Noise

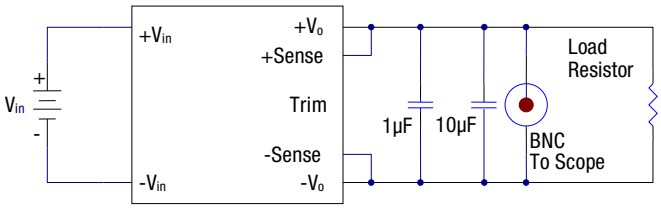

Output ripple and noise is measured with 10µF tantalum and 1µF ceramic capacitors across the output.

Output Capacitance

The QBR series of converters provide unconditional stability with or without external capacitors. For good transient response, low ESR output capacitors should be located close to the point of load (<100mm). PCB design emphasizes low resistance and inductance tracks in consideration of high current applications. Output capacitors with their associated ESR values have an impact on loop stability and bandwidth. DATEL's converters are designed to work with load capacitance to see technical specifications.

Remote On/Off circuit

The converter remote On/Off circuit built-in on input side.
The ground pin of input side Remote On/Off circuit is –Vin pin. For connection examples see below:

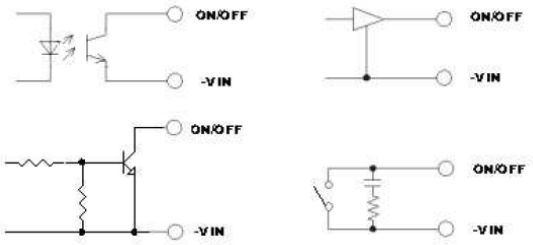

Series operation

Series operation is possible by connecting the outputs two or more units. Connection is shown in below. The output current in series connection should be lower than the lowest rate current in each power module.

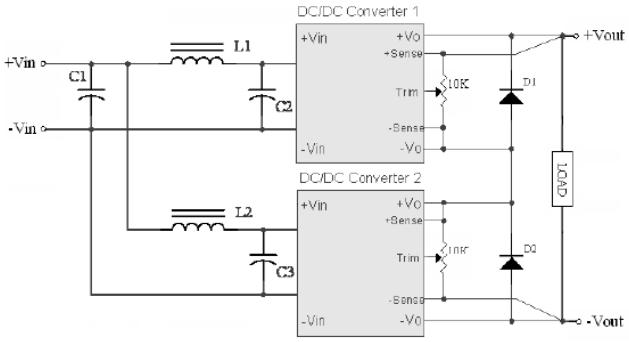

Simple Series Operation Connect Circuit

L1, L2: 1.0uH
C1, C2, C3: 220uF/200V ESR<0.07Ω

Note:
1. If the impedance of input line is high, C1, C2, C3 capacitance must be more than above. Use more than two recommended capacitor above in parallel when ambient temperature becomes lower than -20 °C
2. Recommend Schottky diode (D1,D2) be connected across the output of each series connected converter, so that if one converter shuts down for any reason, then the output stage won't be thermally overstressed. Without this external diode, the output stage of the shut-down converter could carry the load current provided by the other series converters, with its MOSFETs conducting through the body diodes. The MOSFETs could then be overstressed and fail. The external diode should be capable of handling the full load current for as long as the application is expected to run with any unit shut down. Series for ±output operation is possible by connecting the outputs two units, as shown in the schematic below.

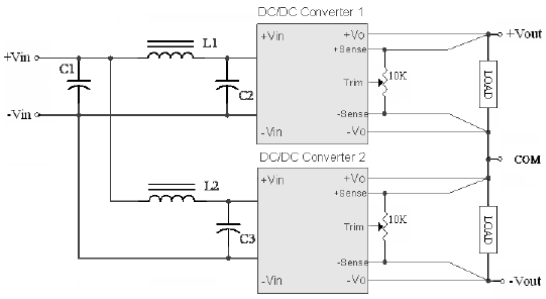

Simple ±Output Operation Connect Circuit

L1, L2: 1.0uH
C1, C2, C3: 220uF/200V ESR<0.07Ω
Note:
If the impedance of input line is high, C1, C2, C3 capacitance must be more than above. Use more than two recommended capacitor above in parallel when ambient temperature becomes lower than -20 °C.

Parallel/Redundant operation

This QBR series parallel operation is not possible.
Parallel for redundancy operation is possible by connecting the units as shown in the schematic below. The current of each converter become unbalance by a slight difference of the output voltage. Make sure that the output voltage of units of equal value and the output current from each power supply does not exceed the rate current.

Suggest use an external potentiometer to adjust output voltage from each power supply.

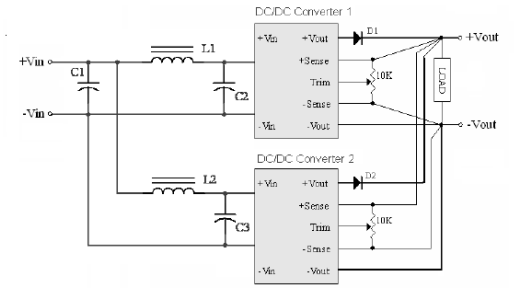

Simple Redundant Operation Connect Circuit L1, L2: 1.0uH
C1, C2, C3: 220uF/200V ESR<0.07Ω
Note:
If the impedance of input line is high, C1, C2, C3 capacitance must be more than above. Use more than two recommended capacitor above in parallel when ambient temperature becomes lower than -20 ℃.

SAFETY and EMC

Input Fusing and Safety Considerations

The QBR series converters have no internal fuse. In order to achieve maximum safety and system protection, always use an input line fuse. We recommended a time delay fuse of 6A. It is recommended that the circuit have a transient voltage suppressor diode (TVS) across the input terminal to protect the unit against surge or spike voltage and input reverse voltage (as shown).

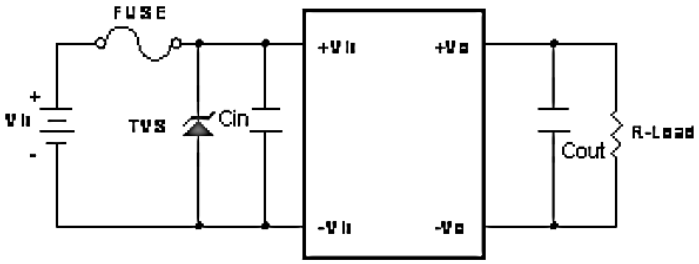

The external input capacitor (Cin) is required if this QBR series has to meet EN61000-4-4, EN61000-4-5.
Tit is recommended to add an aluminum capacitor (220uF/200V) to connect in parallel

EMC Considerations

EMI Test standard: EN55022 / EN55032 Class A Conducted Emission
Test Condition: Input Voltage: Nominal, Output Load: Full Load
(1) EMI and conducted noise meet EN55011 / EN55022 / EN50155 Class A:

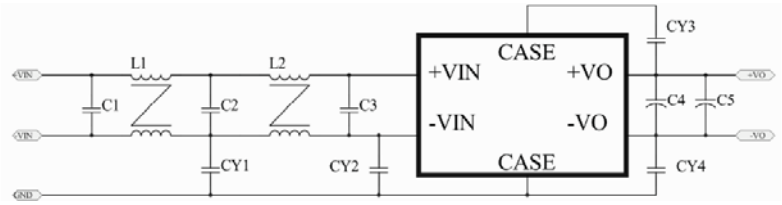

Connection circuit for conducted EMI Class A testing

Model No.	C1, C2, C3	C4	C5	CY1	CY2	CY3	CY4	L1	L2
QBR101 series	220µF/200V	10µF/50V	1µF/50V	1000pF	2200pF	4700pF	3300pF	4.9mH	4.6mH

Note: C1, C2, C3 RUBYCON YXF series aluminum capacitors, C4 is tantalum capacitor, C5 is ceramic capacitor CY1, CY2, CY3, CY4 MURATA Y1 capacitors or equivalent, L1 4.9mH (URT24-05055H) BULL WILL or equivalent, L2 4.6mH (URT24-05055H) BULL WILL or equivalent

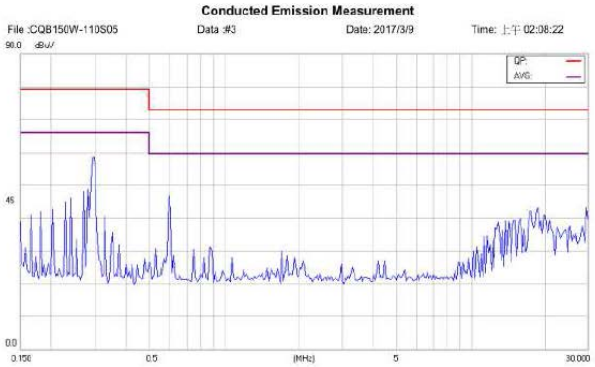

Line Test conducted for QBR101S5-30

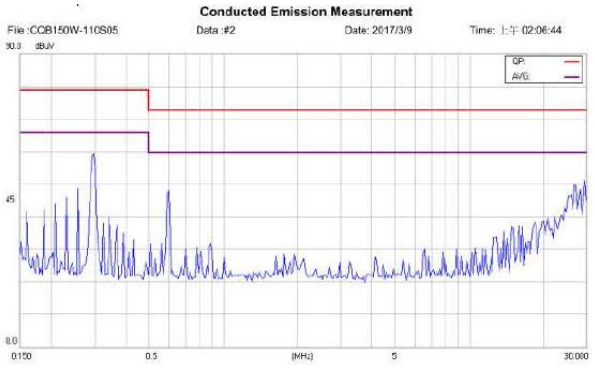

Neutral Test conducted for QBR101S5-30

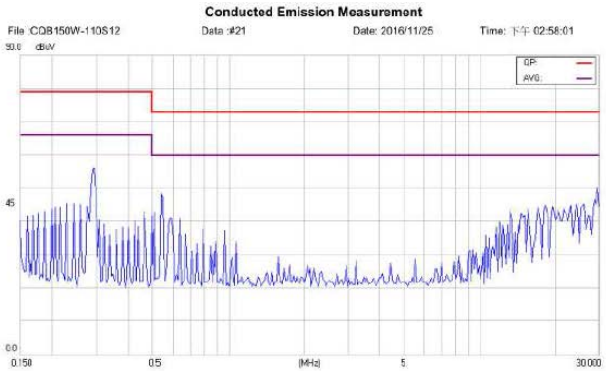

Line Test conducted for QBR101S12-12.5

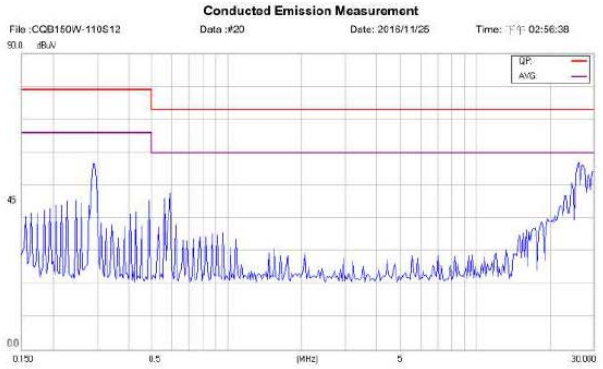

Neutral Test conducted for QBR101S12-12.5

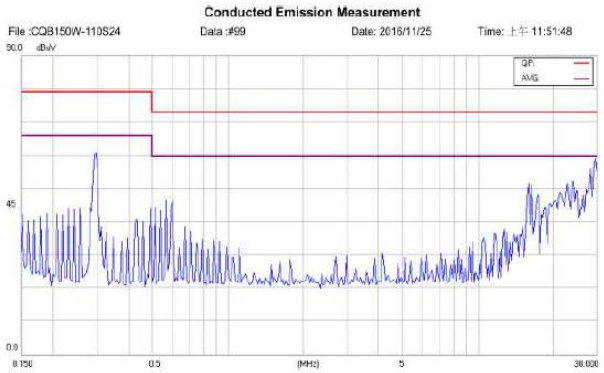

Line Test conducted for QBR101S24-6.3

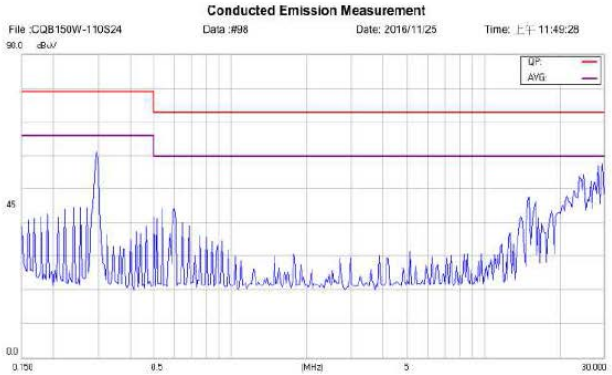

Neutral Test conducted for QBR101S24-6.3

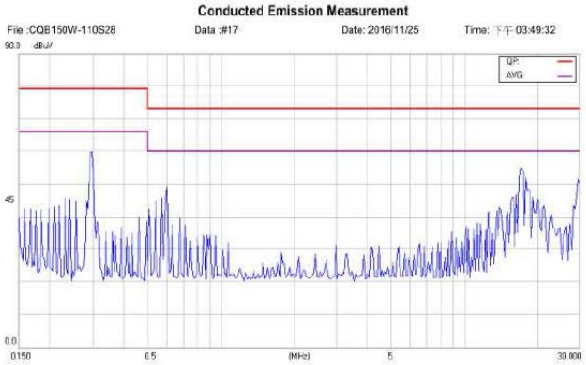

Line Test conducted for QBR101S28-5.4

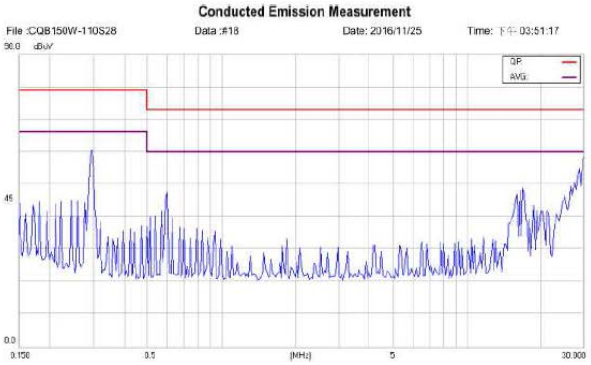

Neutral Test conducted for QBR101S28-5.4

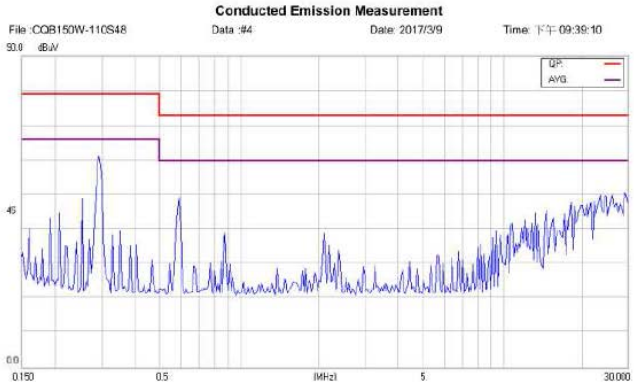

Line Test Conducted for QBR101S48-3.2

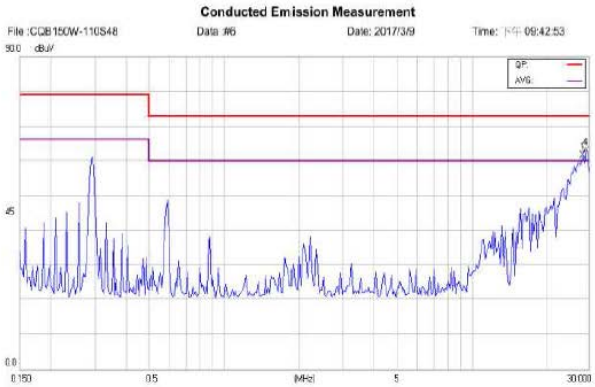

Neutral Test Conducted for QBR101S48-3.2

SUGGESTED CONFIGURATION FOR RIA12 SURGE TEST

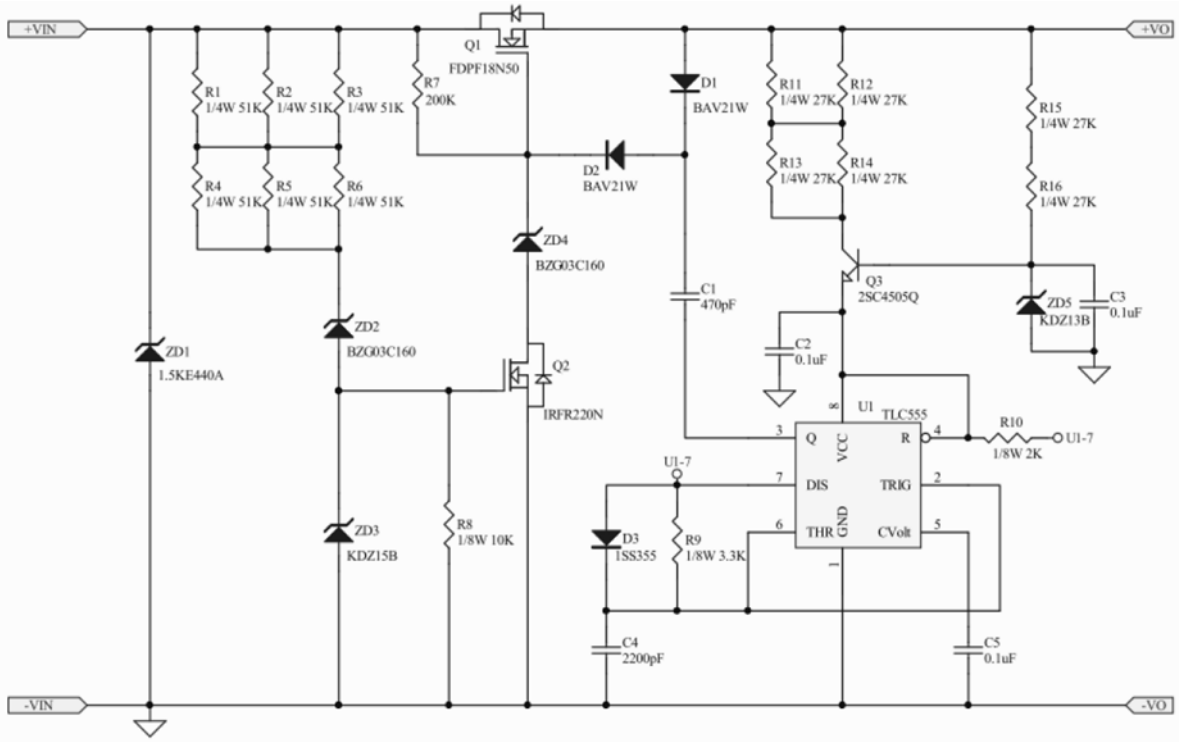

MECHANICAL SPECIFICATIONS

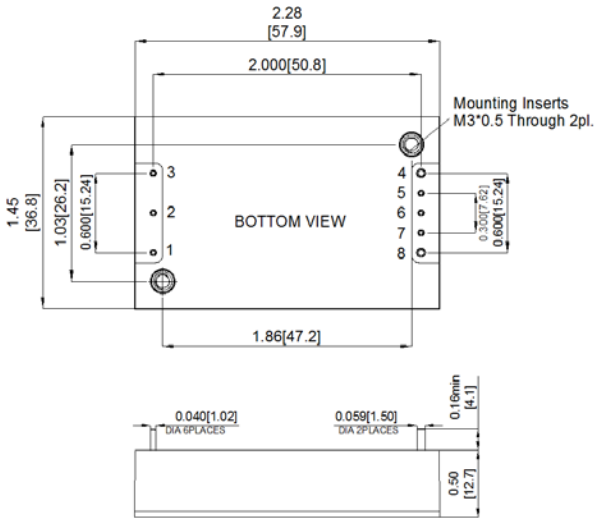

Note: All dimensions are in inches (millimeters). Tolerance: x.xx ±0.02 in. (0.5mm), x.xxx ±0.010 in. (0.25 mm) unless otherwise noted

PIN CONNECTIONS

PIN CONNECTIONS	
PIN	SINGLE OUTPUT
1	+ V Input
2	On/Off
3	- V Input
4	-V output
5	-Sense
6	Trim
7	+ Sense
8	+ V Output

PART NUMBER ORDERING INFORMATION

Family, Form, Factor, Package	Nominal Input Voltage	Number of Outputs	Output Voltage (V)		Current Output (A)	Options
QBR	101	S	5	—	20	N, M, H1, H2
(43-160) 101 Volts	S - Single	5 Volts 12 Volts 24 Volts 28 Volts 48 Volts	5 Volts – 30A 12 Volts – 12.5A 24 Volts – 6.3A 28 Volts – 5.4A 48 Volts – 3.2A			None – Positive ON/OFF Control N – Negative On/Off control M – Clear Mounting Insert H1 – Transverse Heatsink H2 – Longitudinal Heatsink

Note: For proper part ordering, enter option suffixes in order listed in table above

DATEL is a registered Trademark of DATEL, Inc.
120 Forbes Boulevard, Suite 125, Mansfield, MA 02048 USA
ITAR and ISO 9001/2015 REGISTERED

DATEL, Inc. makes no representation that the use of its products in the circuits described herein, or the use of other technical information contained herein, will not infringe upon existing or future patent rights. The descriptions contained herein do not imply the granting of licenses to make, use, or sell equipment constructed in accordance therewith. Specifications are subject to change without notice.